A carriers may calculate a cash working capital allowance either by performing a lead-lag study of interstate revenue and expense items or by using the formula set forth in paragraph (e) of this section. Class B carriers, in lieu of performing a lead-lag study or using the formula in paragraph (e) of this section, may calculate the cash working capital allowance using a standard allowance which will be established annually by the Chief, Common Carrier Bureau. When either the lead-lag study or formula method is used to calculate cash working capital, the amount calculated under the study or formula may be increased by minimum bank balances and working cash advances to determine the cash working capital allowance. Once a carrier has selected a method of determining its cash working capital allowance, it shall not change to an optional method from one year to the next without Commission approval.

(e) In lieu of a full lead-lag study, carriers may calculate the cash working capital allowance using the following formula.

(1) Compute the weighted average revenue lag days as follows:

(i) Multiply the average revenue lag days for interstate revenues billed in arrears by the percentage of interstate revenues billed in arrears.

(ii) Multiply the average revenue lag days for interstate revenues billed in advance by the percentage of interstate revenues billed in advance. (Note: a revenue lead should be shown as a negative lag.)

(iii) Add the results of paragraphs (e)(1) (i) and (ii) of this section to determine the weighted average revenue lag days.

(2) Compute the weighted average expense lag days as follows:

(i) Multiply the average lag days for interstate expenses (*i.e.*, cash operating expenses plus interest) paid in arrears by the percentage of interstate expenses paid in arrears.

(ii) Multiply the average lag days for interstate expenses paid in advance by the percentage of interstate expenses paid in advance. (Note: an expense lead should be shown as a negative lag.)

(iii) Add the results of paragraphs (e)(2) (i) and (ii) of this section to determine the weighted average expense lag days.

(3) Compute the weighted net lag days by deducting the weighted average expense lag days from the weighted average revenue lag days.

(4) Compute the percentage of a year represented by the weighted net lag days by dividing the days computed in paragraph (e)(3) of this section by 365 days.

(5) Compute the cash working capital allowance by multiplying the interstate cash operating expenses (*i.e.*, operating expenses minus depreciation and amortization) plus interest by the percentage computed in paragraph (e)(4) of this section.

[54 FR 9048, Mar. 3, 1989, as amended at 60 FR 12139, Mar. 6, 1995]

§ 65.830 Deducted items.

(a) The following items shall be deducted from the interstate rate base.

(1) The interstate portion of deferred taxes (Accounts 4100 and 4340).

(2) The interstate portion of customer deposits (Account 4040).

(3) The interstate portion of unfunded accrued pension costs (Account 4310).

(4) The interstate portion of other deferred credits (Account 4360) to the extent they arise from the provision of regulated telecommunications services. This shall include deferred gains related to sale-leaseback arrangements.

(b) The interstate portion of deferred taxes, customer deposits and other deferred credits shall be determined as prescribed by 47 CFR part 36.

(c) The interstate portion of unfunded accrued pension costs shall bear the same proportionate relationship as the interstate/intrastate expenses which give rise to the liability.

[54 FR 9049, Mar. 3, 1989]

PART 68—CONNECTION OF TERMINAL EQUIPMENT TO THE TELEPHONE NETWORK

Subpart A—General

Sec.

68.1 Purpose.
68.2 Scope.
68.3 Definitions.

68.4 Hearing aid-compatible telephones.
68.5 Waivers.
68.6 Telephones with volume control.

Subpart B—Conditions on Use of Terminal Equipment

68.100 General.
68.102 Registration requirement.
68.104 Means of connection.
68.106 Notification to telephone company.
68.108 Incidence of harm.
68.110 Compatibility of the telephone network and terminal equipment.
68.112 Hearing aid-compatibility.

Subpart C—Registration Procedures

68.200 Application for equipment registration.
68.202 Public notice.
68.204 Comments and replies.
68.206 Grant of application.
68.208 Dismissal and return of application.
68.210 Denial of application.
68.211 Registration revocation procedures.
68.212 Assignment of equipment registration.
68.213 Installation of other than ''fully protected'' non-system simple customer premises wiring.
68.214 Changes in registered equipment and circuitry.
68.215 Installation of other than ''fully-protected'' system premises wiring.
68.216 Repair of registered terminal equipment and registered protective circuitry.
68.218 Responsibility of grantee of equipment registration.
68.220 Cross reference.
68.222 AIOD trunk and station number verification.
68.224 Notice of non–hearing aid compatibility.
68.226 Registration of digital systems components.

Subpart D—Conditions for Registration

68.300 Labelling requirements.
68.302 Environment simulation.
68.304 Leakage current limitations.
68.306 Hazardous voltage limitations.
68.308 Signal power limitations.
68.310 Longitudinal balance limitations.
68.312 On-hook impedance limitations.
68.314 Billing protection.
68.316 Hearing aid compatibility magnetic field intensity requirements: technical standards.
68.317 Hearing aid compatibility volume control: technical standards.
68.318 Additional limitations.

Subpart E—Complaint Procedures

68.400 Content.
68.402 Amended complaints.
68.404 Number of copies.
68.406 Service.
68.408 Answers to complaints and amended complaints.
68.410 Replies to answers or amended answers.
68.412 Defective pleadings.
68.414 Hearing aid-compatibility: enforcement.

Subpart F—Connectors

68.500 Specifications.
68.502 Configurations.
68.504 Universal patent license agreement.
68.506 Configurations used to connect multiline communications systems such as Private Branch Exchange (PBX) and key telephone systems.

AUTHORITY: 47 U.S.C. 151, 154, 155, 201–205, 208, 215, 218, 220, 226, 227, 303, 313, 314, 403, 404, 410, 412, 522.

SOURCE: 40 FR 53022, Nov. 14, 1975, unless otherwise noted.

Subpart A—General

AUTHORITY: Secs. 4, 5, 303, 48 Stat., as amended, 1066, 1068, 1082; (47 U.S.C. 154, 155, 303).

SOURCE: 45 FR 20841, Mar. 31, 1980, unless otherwise noted.

§68.1 Purpose.

The purpose of the rules and regulations in this part is to provide for uniform standards for the protection of the telephone network from harms caused by the connection of terminal equipment and associated wiring thereto, and for the compatibility of hearing aids and telephones so as to ensure that persons with hearing aids have reasonable access to the telephone network.

(47 U.S.C. 151, 154(i), 154(j), 201–205, 218, 220, 313, 403, 412, and 5 U.S.C. 553)

[49 FR 21733, May 23, 1984]

§68.2 Scope.

(a) *General.* Except as provided for in paragraphs (b), (c), (d), (e), (f), (g), (h), (i), (j) and (k) of this section, the rules and regulations apply to direct connection:

(1) Of all terminal equipment to the public switched telephone network, for use in conjunction with all services other than party line service and coin service;

(2) Of all terminal equipment to channels furnished in connection with foreign exchange lines (customer-premises end), the station end of off-premises stations associated with PBX and Centrex services, trunk-to-station tie lines (trunk end only) and switched service network station lines (CCSA and EPSCS); and

(3) Of all of PBX (or similar) systems to private line services for tie trunk type interfaces, off-premises station lines, automatic identified outward dialing, and message registration. Services may only be added to this section as a result of rulemaking proceedings and the equipment connected to such added services is afforded a reasonable transition period.

(4) Of all customer premises wiring associated with one and two-line (non-system) residential and business telephone service.

(5) Of all terminal equipment to subrate and 1.544 Mbps digital services.

(6) Of registered terminal equipment or registered protective circuitry to Local Area Data Channels and to channels which are similar to Local Area Data Channels that are obtained as special assemblies.

(7) Of all terminal equipment or systems to voiceband private line channels for 2-point and multipoint private line services (excluding those identified in Category II, AT&T Tariff F.C.C. No. 260 or subsequent revisions) that utilize loop start, ringdown or inband signaling; or voiceband metallic channels.

(8) Of the types of test equipment specified in § 68.3, Definitions.

(9) Of all terminal equipment to Public Switched Digital Service (PSDS) Type I, II or III.

(10) Of all terminal equipment to the Integrated Services Digital Network (ISDN) Basic Rate Access (BRA) or Primary Rate Access (PRA).

(b) *Grandfathered terminal equipment (other than PBX and key telephone systems) and protective circuitry.* All terminal equipment (other than PBX and key telephone systems) and protective circuitry of a type directly connected to the public switched telephone network and services identified in § 68.2(a)(2) as of October 17, 1977, may be connected thereafter up to July 1, 1979—and may remain connected for life—without registration unless subsequently modified.

(c) *Grandfathered systems (including, but not limited to, PBX and key telephone systems).* (1) Entire systems, including their equipment, premises wiring, and protective apparatus (if any) directly connected to the public switched telephone network and services identified in § 68.2(a)(2) on June 1, 1978, may remain connected to the public switched telephone network and services identified in § 68.2(a)(2) for life without registration, unless subsequently modified, except for modifications allowed under § 68.2(c)(3).

(2) New installations of equipments may be performed (including additions to existing systems) up to January 1, 1980, without registration of any equipments involved, provided that these equipments are of a type directly connected to the public switched telephone network or services identified in § 68.2(a)(2) as of June 1, 1978. These equipments may remain connected to the public switched telephone network or services identified in § 68.2(a)(2) for life without registration, unless subsequently modified, except for modifications allowed under § 68.2(c)(3).

(3) Modifications to systems and installations involving unregistered equipment:

(i) Use of other than fully-protected premises wiring is a modification under § 68.2. As an exception to the general requirement that no modification is permitted to unregistered equipment whose use is permitted under § 68.2, certain modifications are authorized herein.

(ii) Other than fully-protected premises wiring may be used if it is qualified in accordance with the procedures and requirements of § 68.215. Since there is no ''registrant'' of unregistered equipment, the training and authority required by § 68.215(c) will have to be received from the equipment's manufacturer.

(iii) Existing separate, identifiable and discrete protective apparatus may be removed, or replaced with apparatus of lesser protective function, provided that any premises wiring to which the public switched telephone network or service identified in § 68.2(a)(2) is thereby exposed conforms to § 68.2(c)(2)

above. Minor modifications to existing unregistered equipments are authorized to facilitate installation or premises wiring, so long as they are performed under the responsible supervision and control of a person who complies with § 68.215(c). Since there is no ''registrant'' of unregistered equipment, the training and authority required by § 68.215(c) will have to be received from the manufacturer of the equipment so modified.

(d) *Grandfathered private branch exchange (or similar) systems for connection to private line type services (tie trunk type interfaces, off-premises station lines, automatic identified outward dialing, and message registration).* (1) PBX (or similar) systems, including their equipments, premises wiring, and protective apparatus (if any) directly connected to a private line type service on April 30, 1980 may remain connected to the private line type service for life without registration unless subsequently modified, except for modifications allowed under § 68.2(d)(3).

(2) New installations of equipments may be performed (including additions to existing systems) up to May 1, 1983 without registration of any equipments involved, provided that these equipments are of a type directly connected to a private line type service as of April 30, 1980. These equipments may remain connected to the private line type service for life without registration, unless subsequently modified, except for modifications allowed under § 68.2(d)(3).

(3) Modifications to systems and installations involving unregistered equipment:

(i) Use of other than fully-protected premises wiring is a modification under § 68.2. As an exception to the general requirement that no modification is permitted to unregistered equipment whose use is permitted under § 68.2, certain modifications are authorized herein.

(ii) Other than fully-protected premises wiring may be used if it is qualified in accordance with the procedures and requirements of § 68.215. Since there is no ''registrant'' of unregistered equipment, the training and authority required by § 68.215(c) will have to be received from the equipment's manufacturer.

(iii) Existing separate, identifiable and discrete protective apparatus may be removed, or replaced with apparatus of lesser protective function, provided that any premises wiring to which the private line type service is thereby exposed conforms to § 68.2(d)(ii) above. Minor modifications to existing unregistered equipments are authorized to facilitate installation or premises wiring, so long as they are performed under the responsible supervision and control of a person who complies with § 68.215(c). Since there is no ''registrant'' of unregistered equipment, the training and authority required by § 68.215(c) will have to be received from the manufacturer of the equipment so modified.

(e) *Grandfathered terminal equipment for connection to local area data channels.* All terminal equipment of a type directly connected to Local Area Data Channels or directly connected under special assembly tariff provisions to telephone company-supplied, non-loaded, metallic, greater-than-voiceband circuits for the purpose of providing limited distance data transmission as of February 10, 1986, may be connected thereafter up to August, 10, 1987, and may remain connected for life, without registration unless subsequently modified.

(f) *Grandfathered terminal equipment for connection to subrate and 1.544 Mbps digital services.* (1) Terminal equipment including premises wiring and protective apparatus (if any) directly connected to subrate or to 1.544 Mbps digital services on January 2, 1986, may remain connected and be reconnected to such digital services for life without registration, unless subsequently modified.

(2) New installations of terminal equipments, including premises wiring and protective apparatus (if any) may be installed (including additions to existing systems) up to June 30, 1987, without registration of any terminal equipment involved, provided that these terminal equipments are of a type directly connected to subrate or 1.544 Mbps digital services as of January 2, 1986. These terminal equipments

may remain connected and be reconnected to such digital services for life without registration, unless subsequently modified.

(g) *Grandfathered test equipment.* (1) Test equipment directly connected to the telephone network on February 10, 1986, is considered to be grandfathered and may remain connected to the telephone network for life without registration unless subsequently modified.

(2) New installations of test equipment may be performed up to August 10, 1987 without registration, provided that the test equipment is of a type directly connected to the public switched network or services identified in § 68.2(a)(1), (2), (3), (5), (6), and (7) for life without registration unless subsequently modified.

(h) *Grandfathered terminal equipment or systems for connection to voiceband private line channels for 2-point and multipoint private line services that utilize loop start, ringdown, or inband signaling; or voiceband metallic channels.* (1) Terminal equipment or systems, including premises wiring and protective apparatus (if any), directly connected to voiceband private lines for 2-point or multipoint service on February 10, 1986, may remain connected to that private line type service for life without registration unless subsequently modified, except for modifications allowed under § 68.2(h)(3).

(2) New installations of equipments may be installed (including additions to existing systems) up to August 10, 1987 without registration of any equipments involved, provided that these equipments are of a type directly connected to voiceband private lines for 2-point or multipoint services. These equipments may remain connected to the private line-type service for life without registration, unless subsequently modified, except for modifications allowed under § 68.2(h)(3).

(3) Modification to systems and installations involving unregistered equipment:

(i) Use of other than fully-protected premises wiring is a modification under § 68.2. As an exception to the general requirements that no modification is permitted to unregistered equipment whose use is permitted under § 68.2, certain modifications are authorized herein.

(ii) Other than fully-protected premises wiring may be used if it is qualified in accordance with procedures and requirements of § 68.215. Since there is no ''registrant'' of unregistered equipment, the training and authority required by § 68.215(c) will have to be received from the equipment's manufacturer.

(iii) Existing separate, identifiable, and discrete protective apparatus may be removed or replaced with apparatus of lesser protective function, provided that any premises wiring to which the private line service is thereby exposed conforms to § 68.2(h)(3)(ii) of this section. Minor modifications to existing unregistered equipments are authorized to facilitate installation of premises wiring, so long as they are performed under the responsible supervision and control of a person who complies with § 68.215(c). Since there is no ''registrant'' of unregistered equipment, the training and authority required by § 68.215(c) will have to be received from the manufacturer of the equipment so modified.

(i) *National defense and security.* Where the Secretary of Defense or authorized agent or the head of any other governmental department, agency, or administration (approved in writing by the Commission to act pursuant to this rule) or authorized representative, certifies in writing to the appropriate common carrier that compliance with the provisions of part 68 could result in the disclosure of communications equipment or security devices, locations, uses, personnel, or activity which would adversely affect the national defense and security, such equipment or security devices may be connected to the telephone company provided communications network without compliance with this part, provided that each written certification states that:

(1) The connection is required in the interest of national defense and security;

(2) The equipment or device to be connected either complies with the technical requirement of this part or will not cause harm to the nationwide

telephone network or telephone company employees; and

(3) The installation is performed by well-trained, qualified employees under the responsible supervision and control of a person who meets the qualifications stated in § 68.215(c).

(j) *Grandfathered equipment for connection to PSDS (Type I, II or III).* (1) Terminal equipment, including its premises wiring directly connected to PSDS (Type I, II or III) on or before January 1, 1996, may remain for service life without registration, unless subsequently modified. Service life means the life of the equipment until retired from service. Modification means changes to the equipment that affect compliance with Part 68.

(2) New installation of terminal equipment, including its premises wiring, may occur until July 1, 1997, without registration of any terminal equipment involved, provided that the terminal equipment is of a type directly connected to PSDS (Type I, II or III) as of January 1, 1996. This to PSDS (Type I, II or III) for service life without registration unless subsequently modified.

(k) *Grandfathered equipment for connection to ISDN BRA or PRA:* (1) Terminal equipment, including premises wiring directly connected to ISDN BRA or PRA on January 1, 1996, may remain connected to ISDN BRA or PRA for service life without registration, unless subsequently modified.

(2) New installation of terminal equipment, including premises wiring, may occur until July 1, 1997, without registration of any terminal equipment involved, provided that the terminal equipment is of a type directly connected to ISDN BRA or PRA as of January 1, 1996. This terminal equipment may remain connected and be reconnected to ISDN BRA or PRA for service life without registration unless subsequently modified.

Governmental departments, agencies, or administrations that wish to qualify for interconnection of equipment or security devices pursuant to this section shall file a request with the Secretary of this Commission stating the reasons why the exemption is requested. A list of these departments, agencies, or administrations that have filed requests shall be published in the FEDERAL REGISTER. The Commission may take action with respect to those requests 30 days after publication. The Commission action shall be published in the FEDERAL REGISTER. However, the Commission may grant, on less than the normal notice period or without notice, special temporary authority, not to exceed 90 days, for governmental departments, agencies, or administrations that wish to qualify for interconnection of equipment or security devices pursuant to this section. Requests for such authority shall state the particular fact and circumstances why authority should be granted on less than the normal notice period or without notice. In such cases, the Commission shall endeavor to publish its disposition as promptly as possible in the FEDERAL REGISTER.

(Secs. 4, 5, 303, 48 Stat. 1066, 1068, 1082, as amended (47 U.S.C. 154, 155, 303) (47 U.S.C. 151, 154(i), 154(j), 201–205, 218, 220, 313, 403, 412, and 5 U.S.C. 553)

[40 FR 20841, Mar. 31, 1980, as amended at 49 FR 21734, May 23, 1984; 49 FR 48719, Dec. 14, 1984; 50 FR 48208, Nov. 22, 1985; 51 FR 937, Jan. 9, 1986; 51 FR 16689, May 6, 1986; 61 FR 42387, Aug. 15, 1996]

EFFECTIVE DATE NOTE: At 61 FR 42387, Aug. 15, 1996, in § 68.2, paragraph (a) introductory text was revised and paragraphs (a)(9), (10), (j) and (k) were added, effective Nov. 13, 1996. For the convenience of the user, the superseded text is set forth as follows:

§ 68.2 Scope.

(a) *General.* Except as provided for in paragraphs (b), (c) , (d), (e), and (f), the rules and regulations in this part apply to the direct connection:

* * * * *

§ 68.3 Definitions.

As used in this part:

AIOD data channel simulator: A test circuit that simulates a telephone line during the idle and data-receiver-attached conditions of central office AIOD circuits. The schematic of Figure 68.3(g) is illustrative of the type of circuit that will be required; alternative implementations may be used provided that the same dc voltage and current characteristics and ac impedance characteristics will be presented to the AIOD equipment under test. When

used, the simulator circuit shall be operated over the entire range of resistance, polarities and voltage limits indicated in Figure 68.3(g). Whenever dc current is changed, sufficient time shall be allocated for the current to reach a steady-state condition before continuing the test.

AIOD leads: Terminal equipment leads at the interface solely to transmit Automatic Identified Outward Dialing (AIOD) data from a PBX to the public switched telephone network or to switched service networks (e.g. EPSCS) so that a telephone company can provide a PBX customer with a detailed monthly bill identifying long distance usage by individual PBX stations, tie trunks or the attendant. Data on the channel is transmitted in only one direction, from the PBX to the central office, and consists of a trunk number and a station number for each outgoing call. Two-way dc simplex signaling, as defined for the terminal equipment by the data channel simulator circuit, is used to coordinate the transmitting and receiving functions. One or more pairs of AIOD leads, each designated T (AI) and R (AI) to distinguish them from other tip and ring leads, may appear at an interface, depending on the number of central offices that process AIOD calls for the PBX. However, unless otherwise stated, these leads at the interface should be treated as telephone connections as defined in (x) of this section or as tip and ring where the term ''telephone connection'' is not used.

Auxiliary leads: Terminal equipment leads at the interface, other than telephone connections and leads otherwise defined in these Rules, which leads are to be connected either to common equipment or to circuits extending to central office equipment.

Channel equipment: Equipment in the private line channel of the telephone network that furnishes telephone tip and ring, telphone tip 1 and ring 1, and other auxiliary or supervisory signaling leads for connection at the private line channel interface (where tip 1 and ring 1 is the receive pair for 4-wire telephone connections).

Coin-implemented telephone: A telephone containing all circuitry required to execute coin acceptance and related functions within the instrument itself and not requiring coin service signaling from the central office.

Coin service: Central office implemented coin telephone service.

Companion terminal equipment: Companion terminal equipment represents the terminal equipment that would be connected at the far end of a network facility and provides the range of operating conditions that the terminal equipment which is being registered would normally encounter.

Continuity leads: Terminal equipment continuity leads at the network interface designated CY1 and CY2 which are connected to a strap in a series jack configuration for the purpose of determining whether the plug associated with the terminal equipment is connected to the interface jack.

Demarcation point: The point of demarcation and/or interconnection between telephone company communications facilities and terminal equipment, protective apparatus or wiring at a subscriber's premises. Carrier-installed facilities at, or constituting, the demarcation point shall consist of wire or a jack conforming to subpart F of part 68 of the Commission's rules. ''Premises'' as used herein generally means a dwelling unit, other building or a legal unit of real property such as a lot on which a dwelling unit is located, as determined by the telephone company's reasonable and nondiscriminatory standard operating practices. The ''minimum point of entry'' as used herein shall be either the closest practicable point to where the wiring crosses a property line or the closest practicable point to where the wiring enters a multiunit building or buildings. The telephone company's reasonable and nondiscriminatory standard operating practices shall determine which shall apply. The telephone company is not precluded from establishing reasonable classifications of multiunit premises for purposes of determining which shall apply. Multiunit premises include, but are not limited to, residential, commercial, shopping center and campus situations.

(a) *Single unit installations.* For single unit installations existing as of August 13, 1990, and installations installed after that date the demarcation point

shall be a point within 30 cm (12 in) of the protector or, where there is no protector, within 30 cm (12 in) of where the telephone wire enters the customer's premises.

(b) *Multiunit installations.* (1) In multiunit premises existing as of August 13, 1990, the demarcation point shall be determined in accordance with the local carrier's reasonable and nondiscriminatory standard operating practices. Provided, however, that where there are multiple demarcation points within the multiunit premises, a demarcation point for a customer shall not be further inside the customer's premises than a point twelve inches from where the wiring enters the customer's premises.

(2) In multiunit premises in which wiring is installed after August 13, 1990, including additions, modifications and rearrangements of wiring existing prior to that date, the telephone company may establish a reasonable and nondiscriminatory practice of placing the demarcation point at the minimum point of entry. If the telephone company does not elect to establish a practice of placing the demarcation point at the minimum point of entry, the multiunit premises owner shall determine the location of the demarcation point or points. The multiunit premises owner shall determine whether there shall be a single demarcation point location for all customers or separate such locations for each customer. Provided, however, that where there are multiple demarcation points within the multiunit premises, a demarcation point for a customer shall not be further inside the customer's premises than a point 30 cm (12 in) from where the wiring enters the customer's premises.

Digital milliwatt: A digital signal that is the coded representation of a 0 dBm, 1000 Hertz sine wave.

Direct connection: Connection of terminal equipment to the telephone network by means other than acoustic and/or inductive coupling.

E&M leads: Terminal equipment leads at the interface, other than telephone connections and auxiliary leads, which are to be connected to channel equipment solely for the purpose of transferring supervisory signals conventionally known as Types I and II E&M and schematically shown in Figures 68.3(e)(i) and 68.3(a)(ii).

Encoded analog content: The analog signal contained in coded form within a digital signal.

Equivalent power: The power of the analog signal at the output of a zero level decoder, obtained when a digital signal is the input to the decoder.

Essential Telephones: Means only coin-operated telephones, telephones provided for emergency use, and other telephones frequently needed for use by persons using such hearing aids.

Harm: Electrical hazards to telephone company personnel, damage to telephone company equipment, malfunction of telephone company billing equipment, and degradation of service to persons other than the user of the subject terminal equipment, his calling or called party.

Hearing aid compatible: Except as used at §§ 68.4(a)(3) and 68.414, the terms hearing aid compatible or hearing aid compatibility are used as defined in § 68.316, unless it is specifically stated that hearing aid compatibility volume control, as defined in § 68.317, is intended or is included in the definition.

Inband signaling private line interface: The point of connection between an inband signaling voiceband private line and terminal equipment or systems where the signaling frequencies are within the voiceband. All tip and ring leads shall be treated as telephone connections for the purposes of fulfilling registration conditions.

ISDN Basic Rate Interface: A two-wire interface between the terminal equipment and ISDN BRA. The tip and ring leads shall be treated as telephone connections for the purpose of fulfilling registration conditions.

ISDN Primary Rate Interface: A four-wire interface between the terminal equipment and 1.544 Mbps ISDN PRA. The tip, ring, tip-1, and ring-1 leads shall be treated as telephone connections for the purpose of fulfilling registration conditions.

Local area data channel (LADC) leads: Terminal equipment leads at the interface used to transmit and/or receive signals which may require greater-than-voiceband frequency spectrum

over private line metallic channels designated Local Area Data Channels (LADC). These leads should be treated as ''telephone connections'' as defined in this section or as tip and ring connections where the term ''telephone connection'' is not used.

Local area data channel simulator circuit: A circuit for connection in lieu of a Local Area Data Channel to provide the appropriate impedance for signal power tests. The schematic of Figure 68.3(k) is illustrative of the type of circuit that will be required over the given frequency ranges. When used, the simulator shall be operated over the appropriate range of loop resistance for the equipment under test, under all voltages and polarities that the terminal under test and a connected companion unit are capable of providing.

Longitudinal voltage: One half of the vector sum of the potential difference between the tip connection and earth ground, and the ring connection and earth ground for the tip, ring pair of 2-wire and 4-wire connections; and, additionally for 4-wire telephone connections, one half of the vector sum of the potential difference between the tip 1 connection and earth ground and the ring 1 connection and earth ground for the tip 1, ring 1 pair (where tip 1 and ring 1 are the receive pair).

Loop simulator circuit. A circuit that simulates the network side of a 2-wire or 4-wire telephone connection during testing. The required circuit schematics are shown in Figure 68.3(a) for 2-wire loop or ground start circuits, Figure 68.3(b) for 2-wire reverse battery circuits, Figure 68.3(c) for 4-wire loop or ground start circuits, Figure 68.3(d) for 4-wire reverse battery circuits, and Figure 68.3(j) for voiceband metallic channels. Figure 68.3(i) is an alternative termination for use in the 2-wire loop simulator circuits. Other implementations may be used provided that the same dc voltage and current characteristics and ac impedance characteristics will be presented to the equipment under test as are presented in the illustrative schematic diagrams. When used, the simulator shall be operated over the entire range of loop resistance as indicated in the figures, and with the indicated polarities and voltage limits. Whenever loop current is changed, sufficient time shall be allocated for the current to reach a steady-state condition before continuing testing.

Make-busy leads: Terminal equipment leads at the network interface designated MB and MB1. The MB lead is connected by the terminal equipment to the MB1 lead when the corresponding telephone line is to be placed in an unavailable or artificially busy condition.

Message register leads: Terminal equipment leads at the interface used solely for receiving dc message register (MR) pulses from a central office at a PBX so that message unit information normally recorded at the central office only is also recorded at the PBX. Signaling on the channel is by the application of battery and open conditions applied at the central office. No ac signaling is applied either by the PBX or by the central office. One or more pairs of MR leads, each designated T (MR) and R (MR) may appear at an interface depending on the number of PBX–CO trunks (one MR channel per PBX–CO trunk). However, unless otherwise stated, these leads at the interface should be treated at telephone connections as defined in paragraph (x) of this section or as tip and ring where the term ''telephone connection'' is not used.

Message register signaling channel simulator: A circuit that simulates a telephone line (2-wire or single conductor) and a central office message register battery feed circuit used to convey message register information from the central office to a PBX. The schematic of Figure 68.3(h) is illustrative of the type of circuit that will be required; alternative implementation may be used provided that the same dc voltage and current characteristics and ac impedance characteristics will be presented to the message register equipment under test. When used, the simulator circuit shall be operated over the entire range of resistance and voltage values indicated in Figure 68.3(h). Whenever dc current is changed, sufficient time shall be allocated for the current to reach a steady-state condition before continuing the test.

Metallic voltage: The potential difference between the tip and ring connections for the tip, ring pair of 2-wire

and 4-wire connections and additionally for 4-wire telephone connections, between the tip 1 and ring 1 connections for the tip 1, ring 1 pair (where tip 1 and ring 1 are the receive pair).

Multi-port equipment: Equipment that has more than one telephone connection with provisions internal to the equipment for establishing transmission paths among two or more telephone connections.

Network port: An equipment port of registered protective circuitry which port faces the telephone network.

Non-system premises wiring: Wiring which is used with one and two-line business and residence services, located at the subscriber's premises.

(a) *Fully protected non-system premises wiring.* Non-system premises wiring which is electrically behind registered (or grandfathered) equipment or protective circuitry which assures that electrical contact between the wiring and commercial power wiring or earth ground will not result in hazardous voltages at the telephone network interface.

(b) *Unprotected non-system premises wiring:* All other non-system premises wiring.

Off-premises line simulator circuit: A load impedance for connection, in lieu of an off-premises station line, to PBX (or similar) telephone system loop start circuits (Figure 68.3(f)) during testing. The schematic diagram of Figure 68.3(f) is illustrative of the type of circuit which will be required; alternative implementations may be used provided that the same dc voltage and current characteristics and ac impedance characteristics will be presented to the equipment under test as are presented in the illustrative schematic diagram. When used, the simulator shall be operated over the entire range of loop resistances as indicated in Figure 68.3(f), and with the indicated polarities. Whenever loop current is changed, sufficient time shall be allocated for the current to reach a steady-state condition before continuing testing.

Off-premises station interface: The point of connection between PBX telephone systems (or similar systems) and telephone company private line communication facilities used to access registered station equipment located off the premises. Equipment leads at this interface are limited to telephone tip and ring leads (designated T(OPS) and R(OPS)) where the PBX employs loop-start signaling at the interface. Unless otherwise noted, all T(OPS) and R(OPS) leads shall be treated as telephone connections for purposes of fulfilling registration conditions.

One-port equipment: Equipment which has either exactly one telephone connection, or a multiplicity of telephone connections arranged so that no transmission among such telephone connections, within the equipment, is intended.

Power connections: The connections between commercial power and any transformer, power supply rectifier, converter or other circuitry associated with registered terminal equipment or registered protective circuitry. The following are not power connections.

(a) Connections between registered terminal equipment or registered protective circuitry and sources of non-hazardous voltages (see § 68.306(b)(4) for a definition of non-hazardous voltages).

(b) Conductors which distribute any power within registered terminal equipment or within registered protective circuitry.

(c) Green wire ground (the grounded conductor of a commercial power circuit which is UL-identified by a continuous green color).

Private line channel: Telephone company dedicated facilities and channel equipment used in furnishing private line service from the telephone network for the exclusive use of a particular party or parties.

Private Radio Services: Means private land mobile radio services and other communications services characterized by the Commission in its rules as private radio services.

PSDS Type II Analog Mode Loop Simulator Circuit: A circuit simulating the network side of the two-wire telephone connection that is used for testing terminal equipment to be connected to the PSDS Type II loops. Figure 68.3(m) shows the type of circuit required. Other test circuit configurations may be used provided they operate at the

same DC voltage and current characteristics and AC impedance characteristics presented in the illustrated circuit. When utilized, the simulator should be operated over the entire range of loop resistances, and with the indicated voltage limits and polarities. Whenever the loop current is changed, sufficient time shall be allowed for the current to reach a steady-state condition before continuing testing.

Public Mobile Services: Means air-to-ground radiotelephone services, cellular radio telecommunications services, offshore radio, rural radio service, public land mobile telephone service, and other common carrier radio communications services covered by part 22 of title 47 of the Code of Federal Regulations.

Public Switched Digital Service Type I (PSDS Type I): This service functions only in a digital mode. It employs a transmission rate of 56 Kbps on both the transmit and receive pairs to provide a four-wire full duplex digital channel. Signaling is accomplished using bipolar patterns which include bipolar violations.

Public Switched Digital Service Type II (PSDS Type II): This service functions in two modes, analog and digital. Analog signaling procedures are used to perform supervisory and address signaling over the network. After an end-to-end connection is established, the Switched Circuit Data Service Unit (SCDSU) is switched to the digital mode. The time compression multiplexing (TCM) transmission operated at a digital transmission speed of 144 Kbps to provide full-duplex 56 Kbps on the two-wire access line.

Public Switched Digital Service Type III (PSDS Type III): This service functions only in a digital mode. It uses a time compression multiplexing (TCM) rate of 160 Kbps, over one pair, to provide two full-duplex channels—an 8 Kbps signaling channel for supervisory and address signaling, and a 64 Kbps user data channel on a two-wire access line.

Registered protective circuitry: Separate, identifiable and discrete electrical circuitry designed to protect the telephone network from harm, which is registered in accordance with the rules and regulations in Subpart C of this part.

Registered terminal equipment: Terminal equipment which is registered in accordance with the rules and regulations in Subpart C of this part.

Ringdown private line interface: The point of connection between ringdown voiceband private line service and terminal equipment or systems which provide ringing (20 or 30 Hz) in either direction for alerting only. All tip and ring leads shall be treated as telephone connections for the purposes of fulfilling registration conditions. On 2-wire circuits the ringing voltage is applied to the ring conductor with the tip conductor grounded. On 4-wire circuits the ringing voltage is simplexed on the tip and ring conductors with ground simplexed on the tip (1) and ring (1) conductors.

Secure Telephones: Means telephones that are approved by the United States Government for the transmission of classified or sensitive voice communications.

Specialty adapters: Adapters that contain passive components such as resistive pads or bias resistors typically used for connecting data equipment having fixed-loss loop or programmed data jack network connections to key systems or PBXs.

Subrate digital service: A digital service providing for the full-time simultaneous two-way transmission of digital signals at synchronous speeds of 2.4, 4.8, 9.6 or 56 kbps.

Switched Circuit Data Service Unit (SCDSU): A CPE device, with PSDS functionality, located between the Network Interface and the data terminal equipment. (It also is sometimes referred to as Network Channel Terminating Equipment).

System premises wiring: Wiring which connects separately-housed equipment entities or system components to one another, or wiring which connects an equipment entity or system component with the telephone network interface, located at the customer's premises 'd not within an equipment housing.

(a) *Fully protected systems premises wiring.* Premises wiring which is either:

(1) No greater than 15 meters (50 feet) in length (measured linearly between the points where it leaves equipment or connector housings) and registered as a component of and supplied to the user

with the registered terminal equipment or protective circuitry with which it is to be used. Such wiring shall either be pre-connected to the equipment or circuitry, or may be so connected by the user (or others) if it is demonstrated in the registration application that such connection by the untrained will not result in harm, using relatively fail-safe means.

(2) A cord which complies with the previous subsection either as an integral length or in combination with no more than one connectorized extension cord. If used, the extension cord must comply with the requirements of § 68.200(h) of these Rules.

(3) Wiring located in an equipment room with restricted access, provided that this wiring remains exposed for inspection and is not concealed or embedded in the building's structure, and that it conforms to § 68.215(d).

(4) Electrically behind registered (or grandfathered) equipment, system components or protective circuitry which assure that electrical contact between the wiring and commercial power wiring or earth ground will not result in hazardous voltages or excessive longitudinal imbalance at the telephone network interface.

(b) *Protected system premises wiring requiring acceptance testing for imbalance.* Premises wiring which is electrically behind registered (or grandfathered) equipment, system components or circuitry which assure that electrical contact between the wiring and commercial power wiring will not result in hazardous voltages at the telephone network interface.

(c) *Unprotected system premises wiring.* All other premises wiring.

Telephone connection: Connection to telephone network tip and ring leads for 2-wire and 4-wire connections and, additionally, for 4-wire telephone connections, tip 1 and ring 1 leads and all connections derived from these leads. The term ''derived'' as used here means that the connections are not separated from telephone tip and ring or from telephone tip 1 and ring 1 by a sufficiently protective barrier. Part 68 Rules that apply specifically to telephone network tip and ring pairs shall also apply to telephone network tip 1 and ring 1 pairs unless otherwise specified. In 4-wire connections, leads designated tip and ring at the interface are for transmitting voice frequencies toward the network and leads designated tip 1 and ring 1 at the interface are for receiving voice frequencies from the network.

Telephone network: The public switched network and those private lines which are defined in § 68.2(a) (2) and (3).

Terminal port: An equipment port of registered protective circuitry which port faces remotely-located terminal equipment.

Test Equipment: Equipment connected at the customer's premises that is used on the customer's side of the network interfaces to measure characteristics of the telephone network, or to detect and isolate a communications fault between a terminal equipment entity and the telephone network. Registration is required for test equipment capable of functioning as portable traffic recorded or equipment capable of transmitting or receiving test tones; except registration is not required for devices used by telephone companies solely for network installation and maintenance activities such as hand-held data terminals, linesmen's handsets, and subscriber line diagnostic devices.

Tie trunk transmission interfaces.

(a) 2-Wire: A 2-wire transmission interface with a path that is essentially lossless (except for 2dB switched pad operation, or equivalent) between the interface and the 2-wire or 4-wire, transmission reference point of the terminal equipment.

(b) 4-Wire lossless: A 4-wire transmission interface with a path that is essentially lossless (except for 2dB switched pad operation, or equivalent) between the interface and the 2-wire or 4-wire transmission reference point of the terminal equipment; and

(c) 4-Wire Conventional Terminating Set (CTS): A 4-wire interface with a path to the transmission reference point that has a conventional terminating set providing 2-wire to 4-wire conversion with approximately 4dB of loss and having no gain elements. This device's loss will be referred to as a ''nominal'' 4dB, but in no case is it allowed to be less than 3dB.

(d) Direct Digital Interface: An interface between a digital PBX and a digital transmission facility.

(e) Digital Tandem 4-Wire Interface: A 4-wire digital interface between digital terminal equipment and a digital transmission facility operating at 1.544 Mbps or subrate connecting terminal equipment that provide tandem connections.

(f) Digital Satellite 4-wire Interface: A 4-wire digital interface between digital terminal equipment and a digital transmission facility operating at 1.544 Mbps or subrate connecting terminal equipment that does not provide tandem connections to other digital terminal equipment.

Voiceband metallic private line channel interface: The point of connection between a voiceband metallic private line channel and terminal equipment or systems where the network does not provide any signaling or transmission enhancement. Registered terminal equipment or systems may use convenient signaling methods so long as the signals are provided in such a manner that they cannot interfere with adjacent network channels. All tip and ring leads shall be treated as telephone connections for the purpose of fulfilling registration conditions.

Zero level decoder: A decoder that yields an analog level of 0 dBm at its output when the input is the digital milliwatt signal. See Figure 68.3(l).

1.544 Mbps digital CO 4-wire interface: A 4-wire digital interface between digital terminal equipment and a digital transmission facility operating at 1.544 Mbps connecting to a serving central office.

1.544 Mbps digital service: A full-time dedicated private line circuit used for the transmission of digital signals at a speed of 1.544 Mbps.

LOOP SIMULATOR FOR LOOP START AND GROUND START CIRCUITS

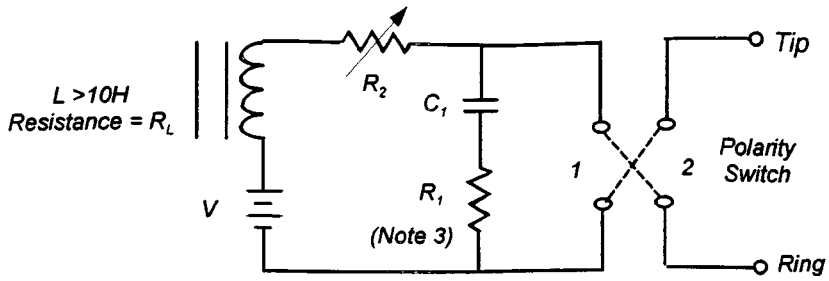

C_1 = 500 mfd -10% + 50% R_1 = 600 ohms +/- 1%

Condition	V - Volts	Switch Position for Test	$R_2 + R_L$
1	Min 42.5 Max 56.5	Both	Continuously variable over 400 to 1740 ohms
2	105	2	2000 ohms

1. Means shall be used to generate, at the point of tip and ring connections to the terminal equipment or protective circuitry, the paramenters of dc line current and ac impedance which are generated by the illustrative circuit depicted above (as appropriate for the equipment under test).
2. In the Longitudinal Balance Limitations, Section 68.310, the use of the "dc portion of the loop simulator circuit" is specified. In such case components of R_1 and C_1 should be removed.
3. Tests for compliance may be made with either R_1 = 600 ohms or R_1, replaced by the alternative configuration shown in Figure 68.3(i).

Figure 68.3(a)

Loop Simulator for Reverse Battery Circuits

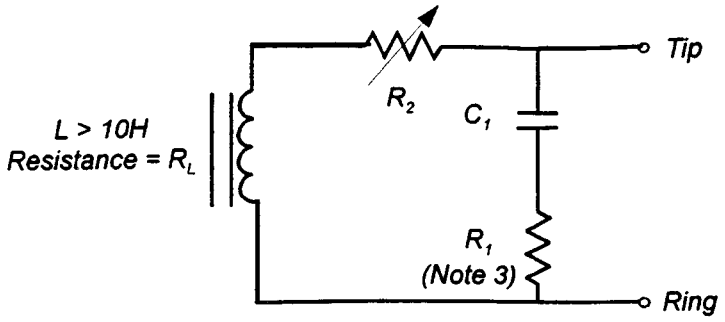

C_1 = 500 mFd -10% + 50%

R_1 = 600 ohms +/- 1%

Notes for Figure 68.3(a) apply also to this drawing

$R_2 + R_L$
Continuously variable over 400 to 2450 ohms

Figure 68.3(b)

LOOP SIMULATOR CIRCUIT FOR 4-WIRE
LOOP START AND GROUND START

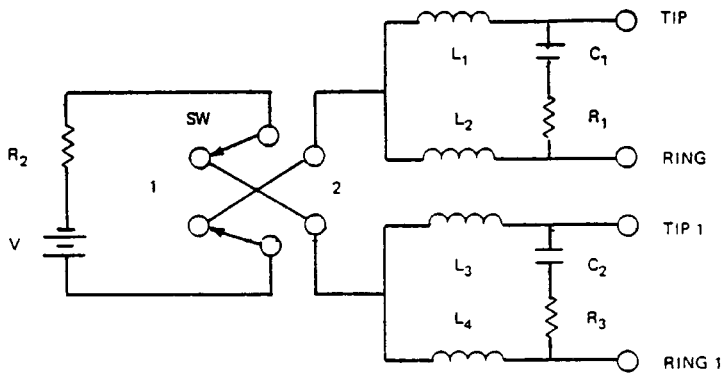

SW = POLARITY SWITCH

$L_1 = L_2 = L_3 = L_4 \geq 5H$ (RESISTANCE = R_{L1}, R_{L2}, R_{L3}, R_{L4})
$R_1 = R_3 = 600$ OHMS, ± 1%
$C_1 = C_2 = 500\mu FD$, −10%, + 50%

CONDITION	V VOLTS		SWITCH POSITION FOR TEST	$R_2 + R_L$ *
1	MIN 42.5	MAX 56.5	BOTH	CONTINUOUSLY VARIABLE OVER 400 TO 1740 Ω
2	105		2	2000Ω

$$R_L = \frac{R_{L1}\ R_{L2}}{R_{L1}+R_{L2}} + \frac{R_{L3}\ R_{L4}}{R_{L3}+R_{L4}}$$

FIGURE 68.3(C)

LOOP SIMULATOR CIRCUIT FOR 4-WIRE
REVERSE BATTERY CIRCUITS

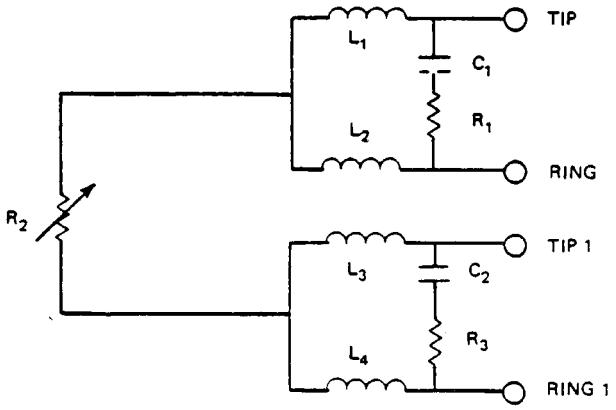

$L_1 = L_2 = L_3 = L_4 \geqslant 5H$ (RESISTANCE = R_{L1}, R_{L2}, R_{L3}, R_{L4})
$R_1 = R_3 = 600$ OHMS, ± 1%
$C_1 = C_2 = 500\mu FD$, -10%, + 50%

$R_2 + R_L$
CONTINUOUSLY VARIABLE OVER 400 TO 2450Ω

$$R_L = \frac{R_{L1} R_{L2}}{R_{L1} + R_{L2}} + \frac{R_{L3} R_{L4}}{R_{L3} + R_{L4}}$$

FIGURE 68.3(D)

REGISTERED TERMINAL EQUIPMENT
ON "A" SIDE OF INTERFACE

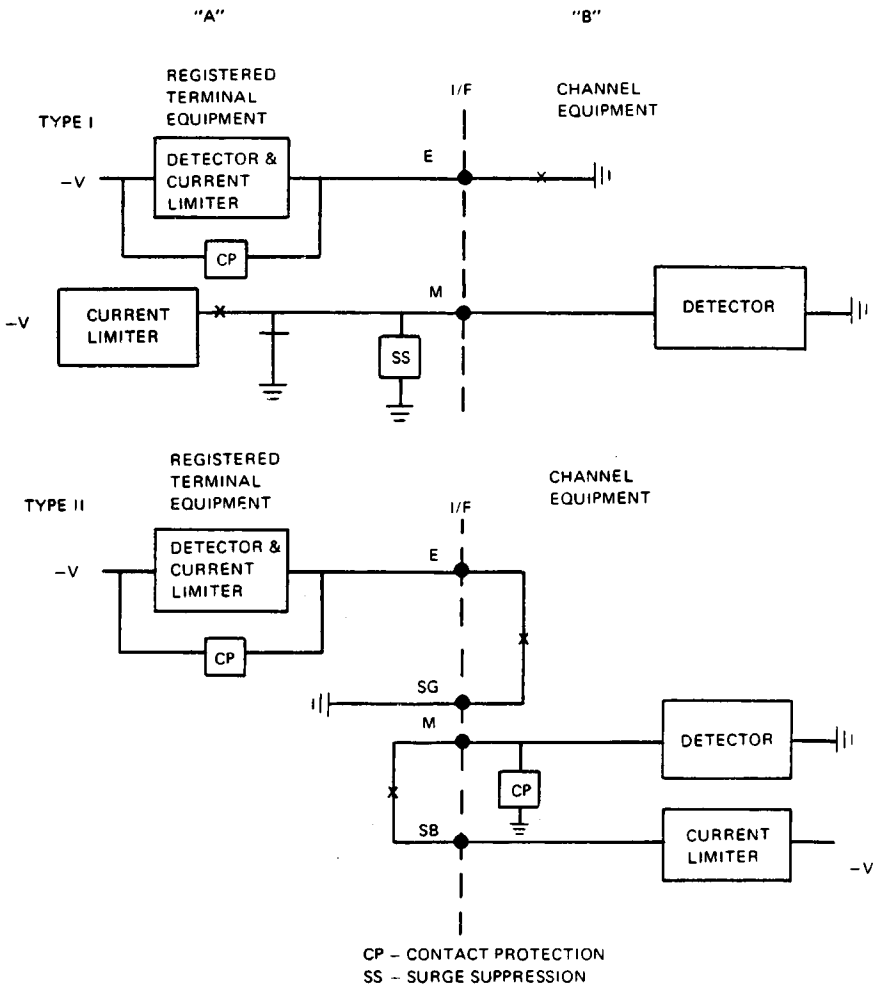

FIGURE 68.3 (e) (i)
E&M TYPES I & II SIGNALING

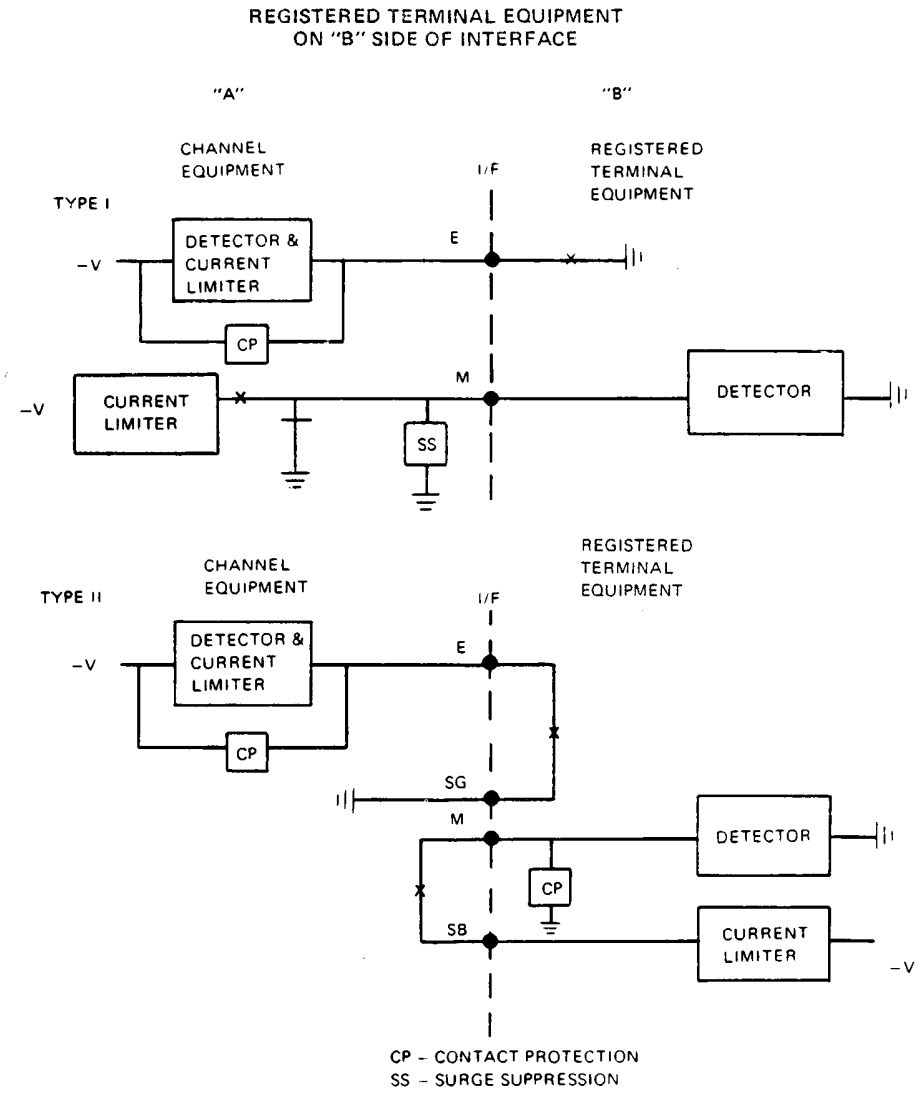

FIGURE 68.3 (e) (i)
E&M TYPES I & II SIGNALING

- 8 -

OFF-PREMISES LOOP SIMULATOR

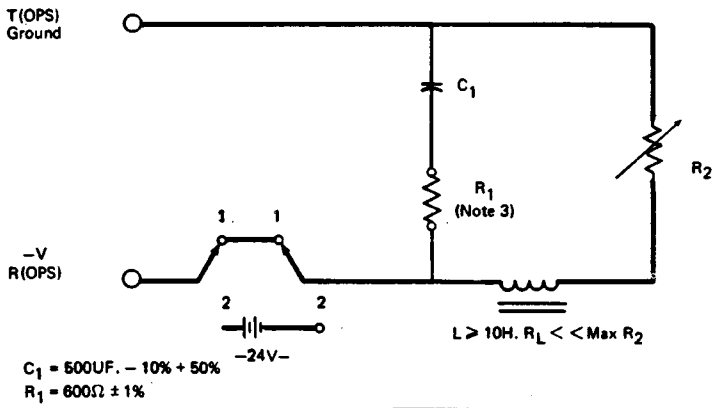

		$R_2 + R_L$ Continuously Variable Over The Following Range		
Condition	Switch Position For Test	Class A	Class B	Class C
1	1	R_L To 200Ω	R_L To 800Ω	R_L To 1800Ω
2	2	Not Applicable	200 To 2300Ω	900 To 3300Ω

The minimum dc current present for all resistance ranges of conditions 1 and 2 shall be 16 ma.

NOTES:

1. Means shall be used to generate, at the point of tip (T OPS) and ring (R OPS) connections to the PBX, the range of resistance and impedance which are employed by the illustrative circuit depicted above.
2. In the longitudinal balance limitations, Section 68.310, the use of the "dc portion of the line simulator" is specified. In such case, components R_1 and C_1 above shall be removed.
3. Tests for compliance may be made with either R_1 = 600 ohms or R_1 replaced by the alternative termination shown in Figure 68.3(i).

Figure 68.3(f)

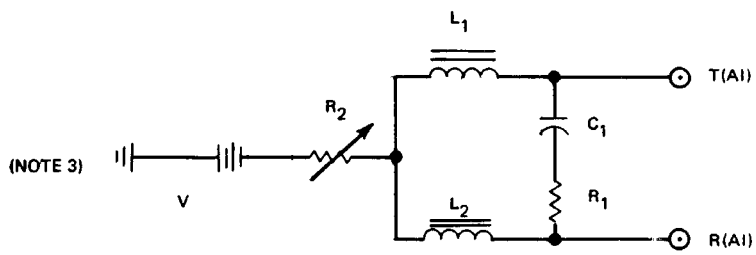

$L_1 = L_2 \geqslant 5H$

$R_1 = 600\Omega \pm 1\%$ (NOTE 2)

$C_1 = 500\mu F, -10\%, +50\%$

OPERATING STATE	V. VOLTS		$R_2 + R_L$,* OHMS (NOTE 5)
	MAX.	MIN.	
1	+3 (NOTE 4)	−3 (NOTE 4)	600-1400
2	+3	−3	600-1400
3	−59.5	−39.5	300-1400

$$*R_L = \frac{R_{L1}R_{L2}}{R_{L1}+R_{L2}}$$

NOTES:

1. Means shall be provided to generate, at the point of T(AI) and R(AI) connections to the PBX, the dc line current and impedance values that are employed by the illustrative circuit depicted above.

2. For signal power measurements in 68.308 (d) and (e) other than voiceband metallic and in the 3995 to 4005 hertz band, use resistive terminations specified in place of R_1.

3. Ground lead should be bonded to simplex signaling ground of registered terminal equipment.

4. The ±3-volt battery shall be used to extend the range of total battery applied to an overall circuit. Thus, if the registered terminal equipment condition provides -42.5 to -56.5 volts, the overall circuit (simulator and PBX AIOD) shall be tested over a range of -39.5 to 59.5 volts.

5. Continuously variable over the range specified.

FIGURE 68.3 (g)

AIOD DATA CHANNEL SIMULATOR CIRCUIT

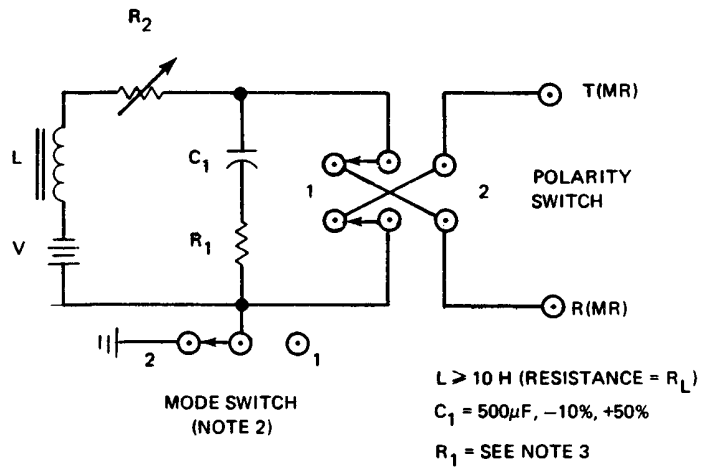

CONDITION	V, VOLTS		POLARITY SWITCH POSITION	MODE SWITCH POSITION	$R_2 + R_L$ OHMS (NOTE 4)
	MIN	MAX			
1	42.5	56.5	BOTH	1	250-1450
2	39.5	59.5	BOTH	2	250- 850
3	63.5	83.5	BOTH	1	1450-2650

NOTES:

1. Means shall be used to generate, at the point of T(MR) and R(MR) connections to the PBX, the range of resistance and impedance values that are employed by the illustrative circuit depicted above.

2. Mode switch position 1 is for metallic return operation; mode switch position 2 is for ground return operation.

3. For signal power measurements specified in 68.308, use Figures 68.308 (b) and (c) for R_1.

4. Continuously variable over range shown.

FIGURE 68.3 (h)

MESSAGE REGISTER SIGNALING CHANNEL SIMULATOR

- 9 -

ALTERNATIVE TERMINATION

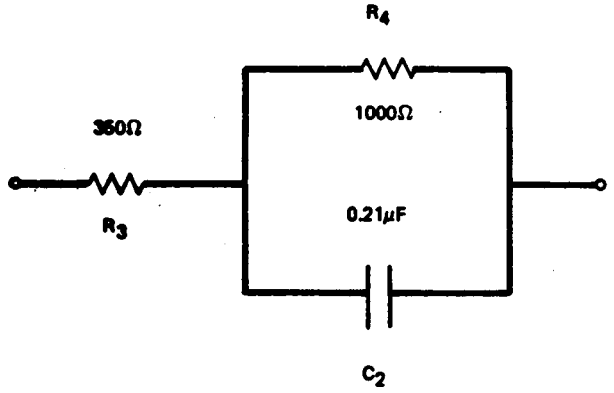

R_3 = 350Ω ± 1%

R_4 = 1000Ω ± 1%

C_2 = 0.21μF ± 1%

NOTE:

When this alternative termination is used during signal power compliance testing, it replaces R_1 (600Ω) in the loop simulator circuit.

Figure 68.3(i)

- 10 -

LOOP SIMULATOR CIRCUIT VOICEBAND METALLIC CHANNELS

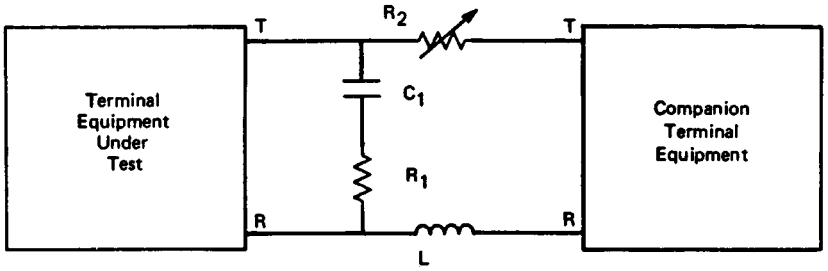

C_1 = 500μF -10%, +5%
R_1 = 600 OHMS ± 1%
L > 10H., Resistance = R_L

$R_2 + R_L$
Continually Variable From R_L To R_X

Where: R_X = Signaling Range Of Terminal Equipment Under Test And,

$R_L << R_X$

NOTES:

1. For Longitudinal Balance Measurements (Section 68.310), The DC Portion Of The Loop Simulator Should Be Provided By Removing R_1 And C_1. Companion Terminal Equipment Grounds (Including Power Supplies) Must Be Isolated From Longitudinal Balance Circuit Grounds.

Figure 68.3 (j)

10a

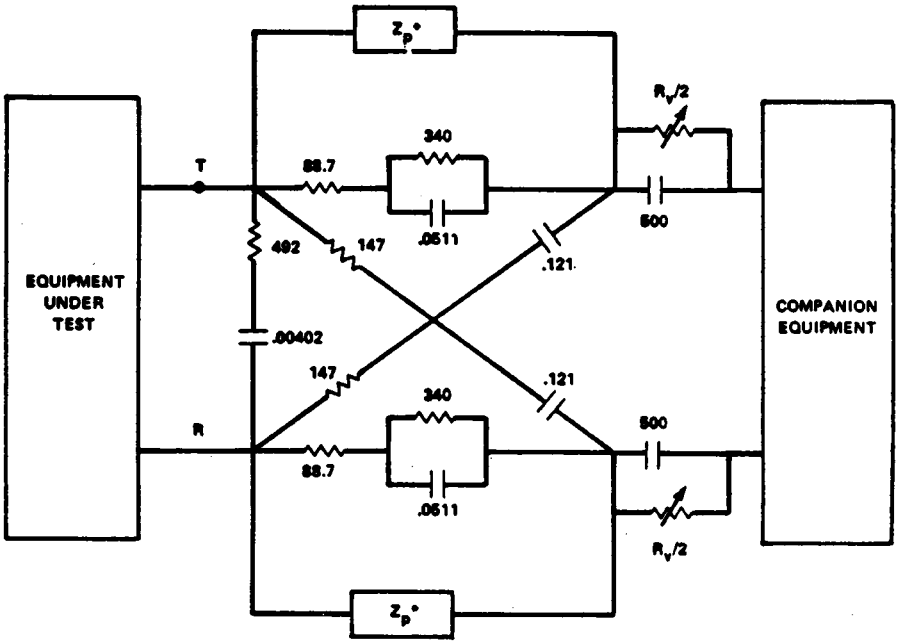

RESISTANCES (OHMS), CAPACITANCES (μF) TOLERANCES ± 2%

$R_v + R_p$ = 50 THRU 3000 OHMS

$*Z_p$ = MAGNITUDE OF THE LOW PASS FILTER IMPEDANCE = < 25 Ω DC; > 3 KΩ 10 Hz – 6 Hz

(R_p) ½ = DC RESISTANCE OF LOW PASS FILTER Z_p ‖ 428.7 Ω

FIGURE 68.3 (K) LADC IMPEDANCE SIMULATOR FOR METALLIC VOLTAGE TESTS.

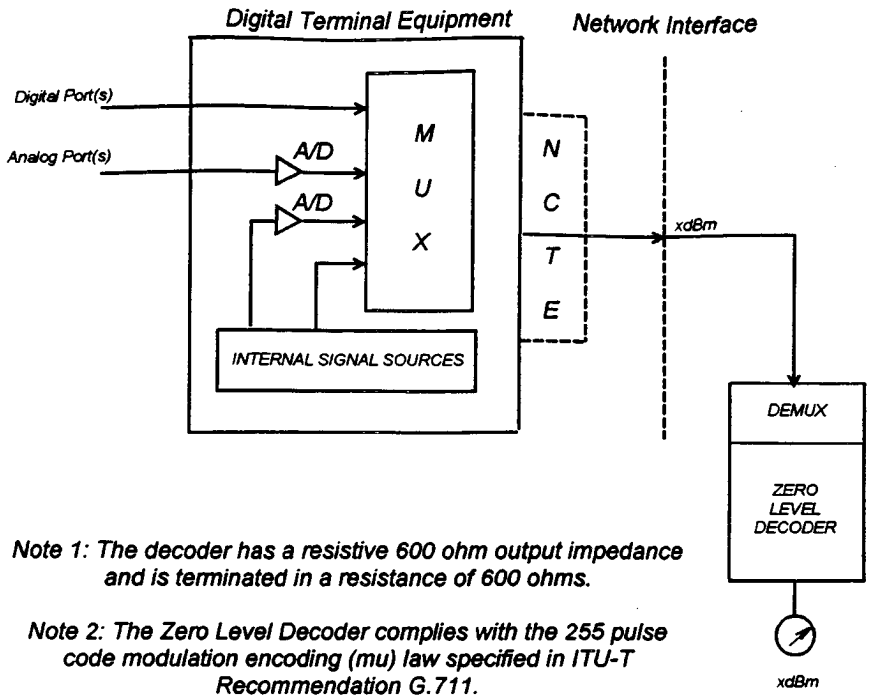

Note 1: The decoder has a resistive 600 ohm output impedance and is terminated in a resistance of 600 ohms.

Note 2: The Zero Level Decoder complies with the 255 pulse code modulation encoding (mu) law specified in ITU-T Recommendation G.711.

ZERO-LEVEL DECODER TEST CONFIGURATION FOR SUBRATE AND 1.544 MBPS DIGITAL CHANNELS

Figure 68.3 (l)

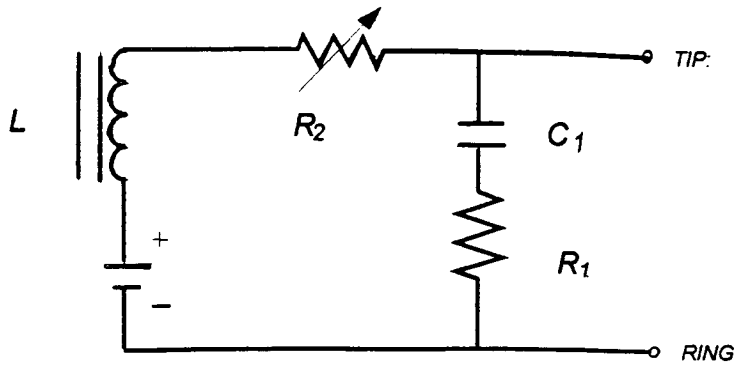

$L \geq 10H$ (Resistance = R_L)

R_1 = 600 ohms +/- 1%

C_1 = 500mF, -10%, +50%

TEST CONDITIONS FOR ANALOG MODE

V (volts) Min	Max	R2 + RL (ohms) continuously variable
36	46	610 to 1510

SIMULATOR CIRCUIT FOR PSDS IN ANALOG MODE
Fig 68.3(m)

[45 FR 20841, Mar. 31, 1980, as amended at 46 FR 40192, Aug. 7, 1981; 49 FR 21734, May 23, 1984; 49 FR 48720, Dec. 14, 1984; 50 FR 48208, Nov. 22, 1985; 51 FR 937, Jan. 9, 1986; 54 FR 21430, May 18, 1989; 55 FR 28629, July 12, 1990; 58 FR 44907, Aug. 25, 1993; 61 FR 42186, Aug. 14, 1996; 61 FR 42387, Aug. 15, 1996]

EFFECTIVE DATE NOTES: 1. At 61 FR 42186, Aug. 14, 1996, in §68.3, the definition of *Hearing aid compatible:* was added, effective Oct. 23, 1996.

2. At 61 FR 42387, Aug. 15, 1996, in §68.3, the definition of *Test equipment* was revised; the definition of *Zero level decoder* was amended by removing the words ''See Figure 68.3(j)'' and adding in its place ''See Figure 68.3(l)''; the definitions of *ISDN Basic Rate Interface, ISDN Primary Rate Interface, PSDS Type II Analog Mode Loop Simulator Circuit, Public Switched Digital Service Type I (PSDS Type I), Public Switched Digital Service Type II (PSDS Type II), Public Switched Digital Service Type III (PSDS Type III), Switched Circuit Data Service Unit (SCDSU)* and figure 68.3(m) were added; figures 68.3(a), 68.3(b), 68.3(l) were revised, effective Nov. 13, 1996. For the superseded figures see the 1995 edition of the CFR. For the convenience of the user, the superseded text for the definition of *Test equipment* is set forth as follows:

§68.3 Definitions.

* * * * *

Test equipment. Equipment connected at the customer's premises that is used on the customer's side of the network interfaces: (a) to measure characteristics of the telephone network; or (b) to detect and/or isolate a communications fault between a terminal equipment entity and the telephone network. Registration is required for test equipment capable of functioning as temporary terminal equipment, such as portable traffic recorders or equipment capable of transmitting test tones, either as generators or responders.

* * * * *

§68.4 Hearing aid-compatible telephones.

(a)(1) Except for telephones used with public mobile services, telephones used with private radio services, and cordless and secure telephones, every telephone manufactured in the United States (other than for export) or imported for use in the United States after August 16, 1989, must be hearing aid compatible, as defined in §68.316. Every cordless telephone manufactured in the United States (other than for export) or imported into the United States after August 16, 1991, must be hearing aid compatible, as defined in §68.316.

(2) Unless otherwise stated and except for telephones used with public mobile services, telephones used with private radio services and secure telephones, every telephone listed in §68.112 must be hearing aid compatible, as defined in §68.316.

(3) A telephone is hearing aid-compatible if it provides internal means for effective use with hearing aids that are designed to be compatible with telephones which meet established technical standards for hearing aid compatibility.

(4) The Commission shall revoke or otherwise limit the exemptions of paragraph (a)((1) of this section for telephones used with public mobile services or telephones used with private radio services if it determines that (i) such revocation or limitation is in the public interest; (ii) continuation of the exemption without such revocation or limitation would have an adverse effect on hearing-impaired individuals; (iii) compliance with the requirements of §68.4(a)(1) is technologically feasible for the telephones to which the exemption applies; and (iv) compliance with the requirements of §68.4(a)(1) would not increase costs to such an extent that the telephones to which the exemption applies could not be successfully marketed.

[54 FR 21430, May 18, 1989, as amended at 55 FR 28763, July 13, 1990; 57 FR 27183, June 18, 1992; 61 FR 42186, Aug. 14, 1996]

EFFECTIVE DATE NOTE: At 61 FR 42186, Aug. 14, 1996, in §68.4, paragraphs (a)(1) and (2) were revised, effective Oct. 23, 1996. For the convenience of the user, the superseded text is set forth as follows:

§68.4 Hearing aid-compatible telephones.

(a)(1) Except for telephones used with public mobile services, telephones used with private radio services, and cordless and secure telephones, every telephone manufactured in the United States (other than for export) or imported for use in the United States after August 16, 1989, must be hearing aid compatible. Every cordless telephone manufactured in the United States (other than for export) or imported into the United States after August 16, 1991, must be hearing aid compatible.

(2) Unless otherwise stated and except for telephones used with public mobile services, telephones used with private radio services and secure telephones, every telephone listed in §68.112 must be hearing aid-compatible.

* * * * *

§ 68.5 Waivers.

The Commission may, upon the application of any interested person, initiate a proceeding to waive the requirements of § 68.4(a)(1) with respect to new telephones, or telephones associated with a new technology or service. The Commission shall not grant such a waiver unless it determines, on the basis of evidence in the record of such proceeding, that such telephones, or such technology or service, are in the public interest, and that (a) compliance with the requirements of § 68.4(a)(1) is technologically infeasible, or (b) compliance with such requirements would increase the costs of the telephones, or of the technology or service, to such an extent that such telephones, technology, or service could not be successfully marketed. In any proceeding under this section to grant a waiver from the requirements of § 68.4(a)(1), the Commission shall consider the effect on hearing-impaired individuals of granting the waiver. The Commission shall periodically review and determine the continuing need for any waiver granted pursuant to this section.

[54 FR 21430, May 18, 1989]

§ 68.6 Telephones with volume control.

As of November 1, 1998, all telephones, including cordless telephones, as defined in § 15.3(j) of this chapter, manufactured in the United States (other than for export) or imported for use in the United States, must have volume control in accordance with § 68.317. Secure telephones, as defined by § 68.3, are exempt from this section, as are telephones used with public mobile services or private radio services.

[61 FR 42186, Aug. 14, 1996]

EFFECTIVE DATE NOTE: At 61 FR 42186, Aug. 14, 1996, § 68.6 was added, effective Oct. 23, 1996.

Subpart B—Conditions on Use of Terminal Equipment

§ 68.100 General.

In accordance with the rules and regulations in subpart B of this part, terminal equipment may be directly connected to the public switched telephone network and to those private line services included in § 68.2(a).

[51 FR 944, Jan. 9, 1986]

§ 68.102 Registration requirement.

Terminal equipment must be registered in accordance with the rules and regulations in subpart C of this part, or connected through registered protective circuitry, which is registered in accordance with the rules and regulations in subpart C of this part.

§ 68.104 Means of connection.

(a) *General.* Any jack installed by the telephone company at, or constituting, the demarcation point shall conform to subpart F of this part. Subject to the requirements of § 68.213, connection of wiring and terminal equipment to the telephone network may be made through a jack conforming to subpart F or by direct attachment to carrier-installed wiring including, but not limited to, splicing, bridging, twisting and soldering. Telephone company-provided ringers may be connected to the network in accordance with the carrier's reasonable and nondiscriminatory standard operating practices. Connection to the network of wiring subject to § 68.215 and terminal equipment used therewith shall be through telephone company-provided jacks conforming to subpart F of this part, in such a manner as to allow for easy and immediate disconnection.

(b) *Data equipment.* Where a customer desires to connect data equipment which has been registered in accordance with § 68.308(b)(4)(i) or (ii), he shall notify the telephone company of each telephone line to which he intends to connect such equipment. The telephone company after determining the attenuation of each such telephone line between the interface and the telephone company central office, will make such connections as are necessary in each standard data jack which it will install, so as to allow the maximum signal power delivered by such data equipment to the telephone company central office to reach but not exceed the maximum allowable signal power permitted at the telephone company central office.

(c) *Tariff description.* As an alternative to description in subpart F of these rules, connections to the telephone network may be made through standard plugs and standard telephone company-provided jacks or equivalent described in nationwide telephone tariffs: *Provided,* That these means of connection otherwise comply with paragraphs (a) and (b) of this section.

[45 FR 20853, Mar. 31, 1980, as amended at 55 FR 28630, July 12, 1990; 61 FR 42392, Aug. 15, 1996; 61 FR 47434, Sept. 9, 1996]

§68.106 Notification to telephone company.

(a) *General.* Customers connecting terminal equipment or protective circuitry to the telephone network shall, upon request of the telephone company, inform the telephone company of the particular line(s) to which such connection is made, the FCC registration number and ringer equivalence number of the registered terminal equipment or registered protective circuitry.

(b) *Systems assembled of combinations of individually-registered terminal equipment and protective circuitry.* Customers connecting such assemblages to the telephone network shall, upon the request of the telephone company, provide to the telephone company the following information:

(1) For each line:

(i) Information required for compatible operation of the equipment with telephone company communications facilities.

(ii) The FCC Registration Numbers for all equipment dedicated to that line.

(iii) The largest Ringer Equivalence to be presented to that line.

(2) A list of FCC Registration Numbers for equipment to be used in the system.

(c) *Systems using other than ''fully-protected'' premises wiring.* Customers who intend to connect premises wiring other than ''fully-protected'' premises wiring to the telephone network shall, in addition to the foregoing, give notice to the telephone company in accordance with §68.215(e).

(d) *AIOD trunk and station number verification.* Customers who intend to install or have installer performed additions to and rearrangements of AIOD functions shall give notice to the telephone company in accordance with §68.222(d).

(e) *OPS.* Customers who intend to connect to OPS facilities shall inform the telephone company of OPS class for which the equipment is registered and connection is desired.

[45 FR 20853, Mar. 31, 1980, as amended at 50 FR 47548, Nov. 19, 1985]

§68.108 Incidence of harm.

Should terminal equipment, inside wiring, plugs and jacks, or protective circuitry cause harm to the telphone network, or, should the carrier reasonably determine that such harm is imminent, the telephone company shall, where practicable, notify the customer that temporary discontinuance of service may be required; however, wherever prior notice is not practicable, the telephone company may temporarily discontinue service forthwith, if such action is reasonable under the circumstances. In case of such temporary discontinuance, the telephone company shall:

(a) Promptly notify the customer of such temporary discontinuance;

(b) Afford the customer the opportunity to correct the situation which gave rise to the temporary discontinuance; and

(c) Inform the customer of his right to bring a complaint to the Commission pursuant to the procedures set forth in subpart E of this part.

[55 FR 28630, July 12, 1990]

§68.110 Compatibility of the telephone network and terminal equipment.

(a) *Availability of interface information.* Technical information concerning interface parameters not specified in this part, including the number of ringers which may be connected to a particular telephone line, which is needed to permit terminal equipment to operate in a manner compatible with telephone company communications facilities, shall be provided by the telephone company upon request.

(b) *Changes in telephone company facilities, equipment, operations or procedures.* The telephone company may make changes in its communications

facilities, equipment, operations or procedures, where such action is reasonably required in the operation of its business and is not inconsistent with the rules and regulations in this part. If such changes can be reasonably expected to render any customer's terminal equipment incompatible with telephone company communications facilities, or require modification or alteration of such terminal equipment, or otherwise materially affect its use or performance, the customer shall be given adequate notice in writing, to allow the customer an opportunity to maintain uninterrupted service.

§ 68.112 Hearing aid-compatibility.

(a) *Coin telephones.* All new and existing coin-operated telephones, whether located on public property or in a semi-public location (*e.g.* drugstore, gas station, private club).

(b) *Emergency use telephones.* Telephones ''provided for emergency use'' include the following:

(1) Telephones, except headsets, in places where a person with a hearing disability might be isolated in an emergency, including, but not limited to, elevators, highways, and tunnels for automobile, railway or subway, and workplace common areas.

NOTE TO PARAGRAPH (b)(1): Examples of workplace common areas include libraries, reception areas and similar locations where employees are reasonably expected to congregate.

(2) Telephones specifically installed to alert emergency authorities, including, but not limited to, police or fire departments or medical assistance personnel.

(3) Telephones, except headsets, in workplace non-common areas. Note: Examples of workplace non-common areas include private enclosed offices, open area individual work stations and mail rooms. Such non-common area telephones are required to be hearing aid compatible, as defined in § 68.316, by January 1, 2000, except for those telephones located in establishments with fewer than fifteen employees; and those telephones purchased between January 1, 1985 through December 31, 1989, which are not required to be hearing aid compatible, as defined in § 68.316, until January 1, 2005.

(i) Telephones, including headsets, made available to an employee with a hearing disability for use by that employee in his or her employment duty, shall, however, be hearing aid compatible, as defined in § 68.316.

(ii) As of January 1, 2000 or January 1, 2005, whichever date is applicable, there shall be a rebuttable presumption that all telephones located in the workplace are hearing aid compatible, as defined in § 68.316. Any person who identifies a telephone as non-hearing aid-compatible, as defined in § 68.316, may rebut this presumption. Such telephone must be replaced within fifteen working days with a hearing aid compatible telephone, as defined in § 68.316, including, as of November 1, 1998, with volume control, as defined in § 68.317.

(iii) Telephones, not including headsets, except those headsets furnished under paragraph (b)(3)(i) of this section, that are purchased, or replaced with newly acquired telephones, must be:

(A) Hearing aid compatible, as defined in § 68.316, after October 23, 1996; and

(B) Including, as of November 1, 1998, with volume control, as defined in § 68.317.

(iv) When a telephone under paragraph (b)(3)(iii) of this section is replaced with a telephone from inventory existing before October 23, 1996, any person may make a bona fide request that such telephone be hearing aid compatible, as defined in § 68.316. If the replacement occurs as of November 1, 1998, the telephone must have volume control, as defined in § 68.317. The telephone shall be provided within fifteen working days.

(v) During the period from October 23, 1996, until the applicable date of January 1, 2000 or January 1, 2005, workplaces of fifteen or more employees also must provide and designate telephones for emergency use by employees with hearing disabilities through one or more of the following means:

(A) By having at least one coin-operated telephone, one common area telephone or one other designated hearing aid compatible telephone within a reasonable and accessible distance for an

individual searching for a telephone from any point in the workplace; or

(B) By providing wireless telephones that meet the definition for hearing aid compatible for wireline telephones, as defined in § 68.316, for use by employees in their employment duty outside common areas and outside the offices of employees with hearing disabilities.

(4) All credit card operated telephones, whether located on public property or in a semipublic location (e.g. drugstore, gas station, private club), unless a hearing aid compatible (as defined in § 68.316) coin-operated telephone providing similar services is nearby and readily available. However, regardless of coin-operated telephone availability, all credit card operated telephones must be made hearing aid-compatible, as defined in § 68.316, when replaced, or by May 1, 1991, which ever comes sooner.

(5) Telephones needed to signal life threatening or emergency situations in confined settings, including but not limited to, rooms in hospitals, residential health care facilities for senior citizens, and convalescent homes:

(i) A telephone that is hearing aid compatible, as defined in § 68.316, is not required until:

(A) November 1, 1997, for establishments with fifty or more beds, unless replaced before that time; and

(B) November 1, 1998, for all other establishments with fewer than fifty beds, unless replaced before that time.

(ii) Telephones that are purchased, or replaced with newly acquired telephones, must be:

(A) Hearing aid compatible, as defined in § 68.116, after October 23, 1996;

(B) Including, as of November 1, 1998, with volume control, as defined in § 68.317.

(iii) Unless a telephone in a confined setting is replaced pursuant to paragraph (b)(5)(ii) of this section, a hearing aid compatible telephone shall not be required if:

(A) A telephone is both purchased and maintained by a resident for use in that resident's room in the establishment; or

(B) The confined setting has an alternative means of signalling life-threatening or emergency situations that is available, working and monitored.

(6) Telephones in hotel and motel guest rooms, and in any other establishment open to the general public for the purpose of overnight accommodation for a fee. Such telephones are required to be hearing aid compatible, as defined in § 68.316, except that, for establishments with eighty or more guest rooms, the telephones are not required to be hearing aid compatible, as defined in § 68.316, until November 1, 1998; and for establishments with fewer than eighty guest rooms, the telephones are not required to be hearing aid compatible, as defined in § 68.316, until November 1, 1999.

(i) Anytime after October 23, 1996, if a hotel or motel room is renovated or newly constructed, or the telephone in a hotel or motel room is replaced or substantially, internally repaired, the telephone in that room must be:

(A) Hearing aid compatible, as defined in § 68.316, after October 23, 1996;

(B) Including, as of November 1, 1998, with volume control, as defined in § 68.317.

(ii) The telephones in at least twenty percent of the guest rooms in a hotel or motel must be hearing aid compatible, as defined in § 68.316, as of April 1, 1997.

(iii) Notwithstanding the requirements of paragraph (b)(6) of this section, hotels and motels which use telephones purchased during the period January 1, 1985 through December 31, 1989 may provide telephones that are hearing aid compatible, as defined in § 68.316, in guest rooms according to the following schedule:

(A) The telephones in at least twenty percent of the guest rooms in a hotel or motel must be hearing aid compatible, as defined in § 68.316, as of April 1, 1997;

(B) The telephones in at least twenty-five percent of the guest rooms in a hotel or motel must be hearing aid compatible, as defined in § 68.316, by November 1, 1999; and

(C) The telephones in one-hundred percent of the guest rooms in a hotel or motel must be hearing aid compatible, as defined in § 68.316, by January 1, 2001 for establishments with eighty or more guest rooms, and by January 1, 2004 for establishments with fewer than eighty guest rooms.

(c) *Telephones frequently needed by the hearing impaired.* Closed circuit telephones, i.e., telephones which cannot directly access the public switched network, such as telephones located in lobbies of hotels or apartment buildings; telephones in stores which are used by patrons to order merchandise; telephones in public transportation terminals which are used to call taxis or to reserve rental automobiles, need not be hearing aid compatible, as defined in § 68.316, until replaced.

[49 FR 1362, Jan. 11, 1984, as amended at 55 FR 28763, July 13, 1990; 57 FR 27183, June 18, 1992; 61 FR 42186, Aug. 14, 1996; 61 FR 42392, Aug. 15, 1996]

EFFECTIVE DATE NOTES: 1. At 61 FR 42186, Aug. 14, 1996, in § 68.112, paragraphs (b)(1), (3), (4), (5) and (c) were revised and (b)(6) was added, effective Oct. 23, 1996. For the convenience of the user, the superseded text is set forth as follows:

§ 68.112 Hearing aid-compatibility.

* * * * *

(b) * * *

(1) Telephones in places where a person with impaired hearing might be isolated in an emergency, including, but not limited to, elevators, automobile, railroad or subway tunnels, highways and all areas of the workplace including common areas (libraries, reception areas and similar locations where employees are reasonably expected to congregate). With respect to the workplace, noncommon area telephones are not required to be hearing aid-compatible until May 1, 1993, for establishments with twenty or more employees, and until May 1, 1994, for all other establishments, except for telephones made available to a hearing impaired employee for use by that employee in his or her employment duty. Such telephones shall be hearing aid-compatible by May 1, 1992.

* * * * *

(3) Telephones needed to signal life-threatening or emergency situations in confined settings, including but not limited to, rooms in hospitals, residential health care facilities for senior citizens, convalescent homes, and prisons. If an alternative means of signalling life-threatening or emergency situations is available, a hearing aid-compatible telephone is not required until May 1, 1993, for establishments with twenty or more employees, and until May 1, 1994, for all other establishments, unless replaced before that time.

(4) All credit card operated telephones, whether located on public property or in a semipublic location (e.g. drugstore, gas station, private club), unless a hearing aid-compatible coin-operated telephone providing similar services is nearby and readily available. However, regardless of coin-operated telephone availability, all credit card operated telephones must be made hearing aid compatible when replaced, or by May 1, 1991, which ever comes sooner.

(5) Until May 1, 1993, for establishments with twenty or more employees, and until May 1, 1994, for all other establishments, telephones in hotel and motel rooms replaced after January 1, 1985, must be hearing aid-compatible unless at least ten percent of the rooms in a hotel or motel are equipped to accommodate a hearing impaired customer. A room is equipped to accommodate a hearing impaired customer if

(i) It contains a permanently installed hearing aid-compatible telephone; or

(ii) It contains a telephone which will accept a plugin hearing aid-compatible handset, which shall be provided to the hearing impaired customer by the hotel or motel; or

(iii) The room contains a jack into which a hearing air-compatible telephone provided to the customer by the hotel or motel may be plugged (i.e., in addition to a permanently installed telephone which is not hearing aid-compatible). If fewer than ten percent of the rooms in a hotel or motel are hearing aid-compatible, when replacing a telephone the hotel or motel must, until the ten percent minimum is reached:

(A) Replace it with a hearing aid-compatible telephone, or

(B) Procure and maintain a plug-in hearing aid-compatible telephone handset which it will provide to a hearing impaired customer upon request at check-in. For establishments with twenty or more employees, all telephones in hotel and motel rooms are required to be hearing aid-compatible by May 1, 1993. For establishments with fewer than twenty employees, all telephones in hotel and motel rooms are required to be hearing aid-compatible by May 1, 1994.

(c) *Telephones frequently needed by the hearing impaired.* Closed circuit telephones, i.e., telephones which cannot directly access the public switched network, such as telephones located in lobbies of hotels or apartment buildings; telephones in stores which are used by patrons to order merchandise; telephones in public transportation terminals which are used to call taxis or to reserve rental automobiles, need not be hearing aid-compatible until replaced.

2. At 61 FR 42392, Aug. 15, 1996, in § 68.112, paragraph (b)(2) was amended by removing the word ''policy'' and adding in its place the word ''police'', effective Nov. 13, 1996.

Subpart C—Registration Procedures

§68.200 Application for equipment registration.

An original and one copy of an application for registration of terminal equipment and protective circuitry shall be submitted on FCC Form 730 to the Federal Communications Commission, Washington, DC 20554 (Applications requiring fees as set forth at part 1, subpart G of this chapter must be filed in accordance with §0.401(b) of the rules). An application for original approval of an equipment type directly connected to the network on May 1, 1976, may be submitted as a short form application (unless the Commission specifically requests the filing of complete information). All other applications shall have all questions answered and include the following information:

(a) Identification, technical description and purpose of the equipment for which registration is sought.

(b) The means, if any, employed to limit signal power into interface.

(c) A description of all circuitry employed in assuring compliance with this part 68 including the following:

(1) Specifications, including voltage or current ratings of all circuit elements whether active or passive, in that part of the equipment or circuitry which ensures compliance with subpart D of this part.

(2) A circuit diagram containing the complete circuit of that part of the equipment or circuitry which ensures compliance with subpart D of this part. If this portion of the device is subject to factory or field adjustment by the applicant or an agent thereof, instructions for these adjustments shall be included. In addition, if the equipment or circuitry is designed to operate from power supplied by electric utility lines, the circuit diagram shall also include that portion of the device connected to such lines, including the power supply to the internal circuitry, and whatever means are employed to isolate such utility lines from the internal circuitry.

(3) If a service manual is submitted, and any of these items are covered therein, it will be sufficient to list the pages in the manual on which the information specified in the item(s) appear.

(d) A statement that the terminal equipment or protective circuitry complies with and will continue to comply with the rules and regulations in subpart D of this part, accompanied by such test results, description of test procedures, analyses, evaluations, quality control standards and quality assurance standards as are necessary to demonstrate that such terminal equipment or protective circuitry complies with and will continue to comply with all the applicable rules and regulations in subpart D of this part. The Common Carrier Bureau will publish a Registration Application Guide referencing acceptable test procedures; but other test methods may be employed provided they are fully described in the application and are found acceptable by the Commission.

(e) A photograph, sample or drawing of the equipment label showing the information to be placed thereon.

(f) Photographs, of size A4 (12.0 cm x 29.7 cm) or 8 x 10 inches (20.3 cm x 25.4 cm) of the equipment of sufficient clarity to reveal equipment construction and layout and labels for controls, with sufficient views of the internal construction to define component placement and chassis assembly. Photographs smaller than A4 (21.0 cm x 29.7 cm) or 8 x 10 inches (20.3 cm x 25.4 cm) will be acceptable if mounted on paper A4 (21.0 cm x 29.7 cm) or 8 x 10 inches (20.3 cm x 25.4 cm) and of sufficient clarity for the purpose. Insofar as these requirements are met by photographs or drawings contained in service manual or instruction manual included with the application, additional photographs are required only to complete the required showing.

(g) If the device covered by the application is designed to operate in conjunction with other equipment, the characteristics of which can affect compliance of the device covered by the application with subpart D of this part, then such other equipment must also be registered. If such other equipment already is registered, then the FCC Registration Number(s) must be supplied.

(h) Electrically transparent adapters, extension cords, line-transfer swiches

and cross-connect panels need not be registered provided they meet the requirements of § 68.304(a) and the temperature-humidity requirements of § 68.302(b). Descriptive installation procedures for cross-connect panels (where used) must be provided in equipment registration applications. Additional requirements include:

(1) An extension cord must consist of a male connector and a female connector and wiring between them which is no longer than 7.6 meters (25 feet).

(2) Transfer switches must be manually operated, not use relays, and be wired in a balanced tip and ring configurations. Switch wiring must be ''fully protected'' wiring, no longer than 7.6 meters (25 feet).

(i) Any application for registration or modification of the registration of a telephone, filed on or after March 1, 1984, shall state whether the handset complies with § 68.316 of these rules (defining hearing aid compatibility), or state that it does not comply with that section. A telephone handset which complies with § 68.316 shall be deemed a ''hearing aid-compatible telephone'' for purposes of § 68.4.

(j) Terminal equipment having the following lead connections to standard jacks or adapters are subject to the following compliance tests:

(1) *Make-busy leads:* The MB and MB1 leads shall be considered telephone connections and comply with the requirements of §§ 68.304 and 68.306 when isolated from tip and ring. When the corresponding telephone line is of the loop-start type the tip and ring leads shall comply with all part 68 rules when the MB and MB1 leads are bridged to the tip and ring connections.

(2) *Continuity leads:* Leakage current limitations shall be met as specified in § 68.304. The design of the terminal equipment shall assure that the open circuit dc voltage to ground shall not exceed 18 volts; the dc current in a short circuit across CY1 and CY2 shall not exceed 10 milliamperes; and any ac voltage to ground appearing on the continuity leads from sources in the terminal equipment shall not exceed 5 volts peak. The leads, CY1 and CY2, shall be treated as telephone connections for the purpose of hazardous voltage limitation tests and are only required to comply with § 68.304, 68.306(a) and (b)(1). Terminal equipment furnished with CY1 and CY2 leads shall comply with the criteria of § 68.308 and 68.314 with a short circuit across the CY1 and CY2 leads.

(3) Specialty adapters need only be evaluated for compliance with §§ 68.304 and 68.310 under the conditions specified in § 68.310. Resistors used for setting signal power levels must meet the requirements of § 68.502(e). Specialty adapters may be labelled, ''FCC Reg. No. XXX''. (The proper number should be included.) The other information required by §§ 68.300 need not be provided.

(4) Data jack programmed resistor leads (PR and PC): *See* § 68.502(e). Leakage current limitations shall be met as specified in § 68.304. PR and PC will be treated as telephone connections for the purpose of hazardous voltage limitation tests and are only required to comply with § 68.306(a) and (b)(1). Equipment furnished with PR and PC leads shall comply with the criteria of §§ 68.308 and 68.314 for all permitted values of the programming resistor specified in § 68.502(e).

(k) Any application for registration of a cordless telephone operating under the provisions of part 15 of this chapter shall be accompanied by a statement indicating that the device contains appropriate provision for protection of the public switched telephone network, pursuant to the requirements in § 15.214 of this chapter.

[41 FR 8048, Feb. 24, 1976, as amended at 42 FR 32244, June 24, 1977; 49 FR 1363, Jan. 11, 1984; 49 FR 48720, Dec. 14, 1984; 51 FR 944, Jan. 9, 1986; 51 FR 12616, Apr. 14, 1986; 52 FR 10231, Mar. 31, 1987; 56 FR 3785, Jan. 31, 1991; 58 FR 44907, Aug. 25, 1993; 61 FR 42392, Aug. 15, 1996]

EFFECTIVE DATE NOTE: At 61 FR 42392, Aug. 15, 1996, in § 68.200, the introductory text was amended by removing the words ''two copies'' and adding in its place ''one copy'' and paragraph (d) was revised, effective Nov. 13, 1996. For the convenience of the user, the superseded text is set forth as follows:

§ 68.200 Application for equipment registration.

* * * * *

(d) A statement that the terminal equipment or protective circuitry complies with and will continue to comply with the appropriate rules and regulations in subpart D of

this part, accompanied by such test results, description of test procedures, analyses, evaluations, quality control standards and quality assurance standards as are necessary to demonstrate that such terminal equipment or protective circuitry complies with and will continue to comply with all the applicable rules and regulations in subpart D of this part. The Office of Engineering and Technology may issue an OET Bulletin describing acceptable test methods; other test methods may be employed provided they are fully described in the application and are found acceptable by the Commission.

* * * * *

§68.202 Public notice.

(a) The Commission will issue public notices of the filing of applications for equipment registrations and the grants thereof. No grant will issue before five days from the date of the public notice of the filing of the application.

(b) The Commission will maintain lists of equipment for which it has granted registration and for which it has revoked registration.

[41 FR 8049, Feb. 24, 1976, as amended at 50 FR 47548, Nov. 19, 1985]

§68.204 Comments and replies.

Comments may be filed as to any application for equipment registration within five days of the date of the public notice of its filing. Replies to such comments may be filed within five days of the filing of such comments. All comments must be served on all parties filing comments. An original and three copies of all comments and replies must be filed.

[50 FR 47548, Nov. 19, 1985]

§68.206 Grant of application.

(a) The Commission will grant an application for equipment registration if it finds from an examination of such application and other matter which it may officially notice, that the equipment will comply with the rules and regulations in subpart D of this part, or that such grant will otherwise serve the public interest.

(b) Grants will be made in writing showing the effective date of the grant and any special condition(s) attaching to the grant.

(c) Equipment registration shall not attach to any equipment, nor shall any equipment registration be deemed effective, until the application has been granted.

§68.208 Dismissal and return of application.

(a) An application which is not filed in accordance with the requirements of this part or which is defective with respect to completeness of answers to questions, execution or other matters of a formal character, may not be accepted for filing by the Commission and may be returned as unacceptable for filing unless accompanied by a fully supported request for waiver.

(b) Any application, upon written request, may be dismissed prior to a determination granting or denying the equipment registration requested.

(c) If an applicant is requested by the Commission to furnish any additional documents, information or equipment not specifically required by this subpart, a failure to comply with the request within the time, if any, specified by the Commission will result in the dismissal of such application.

[40 FR 53023, Nov. 14, 1975, as amended at 41 FR 8049, Feb. 24, 1976; 61 FR 42392, Aug. 15, 1996]

EFFECTIVE DATE NOTE: At 61 FR 42392, Aug. 15, 1996, in §68.208, paragraph (a) was amended by removing the words ''of this part of which'' and adding in its place ''of this part or which'', effective Nov. 13, 1996.

§68.210 Denial of application.

If the Commission is unable to make the findings specified in §68.206 it will deny the application. Notification of the denial will include a statement of the reasons for the denial.

§68.211 Registration revocation procedures.

(a) *Cause for revocation*. The Commission may revoke the Part 68 registration of a registrant:

(1) Who has obtained the equipment registration by misrepresentation;

(2) Whose registered equipment is shown to cause harm to the network;

(3) Who willfully or repeatedly fails to comply with the terms and conditions of its Part 68 registration; or

(4) Who willfully or repeatedly fails to comply with any rule, regulation or order issued by the Commission under the Communications Act of 1934 relating to equipment registration.

(b) *Notice of Intent to Revoke Part 68 Registration*. Before revoking a Part 68 registration under the provisions of this section, the Commission, or the Common Carrier Bureau under delegated authority, will issue a written Notice of Intent to Revoke Part 68 Registration, or Joint Notice of Apparent Liability for Forfeiture and Intent to Revoke Part 68 Registration pursuant to §§ 1.80 and 1.89 of this chapter.

(1) *Contents of the Notice*. The Notice will:

(i) Identify the registration date(s) and registration number(s) of the equipment, and the rule or federal law apparently violated;

(ii) Set forth the nature of the act or omission charged against the registrant, and the facts upon which such charge is based;

(iii) Specify that in the event of revocation, the registrant may not reapply for registration of the same product for a period of six months; and

(iv) Specify that revocation of the registration may be in addition to, or in lieu of, an amount in forfeiture levied pursuant to § 1.80 of this chapter.

(c) *Delivery*. The Notice will be sent via certified mail to the registrant at the address certified in the Part 68 application associated with the registration at issue.

(d) *Response*. The registrant will be given a reasonable period of time (usually 30 days from the date of the Notice) to show, in writing, why its part 68 registration should not be revoked or why the forfeiture penalty should not be imposed or should be reduced.

(e) *Reapplication*. A registrant whose registration has been revoked may not apply for registration of the same product for a period of six months from the date of revocation of the registration.

(f) *Reconsideration or appeal*. A registrant who is issued a revocation of equipment registration and/or forfeiture assessment may request reconsideration or make administrative appeal of the decision pursuant to Part 1 of the Commission's rules—Practice and Procedure, Part 1 of this chapter.

[61 FR 42392, Aug. 15, 1996]

EFFECTIVE DATE NOTE: At 61 FR 42392, Aug. 15, 1996, § 68.211 was added, effective Nov. 13, 1996.

§ 68.212 Assignment of equipment registration.

Commission equipment registration may not be assigned, exchanged or in any other way transferred to another party, without prior written notice to the Commission.

§ 68.213 Installation of other than "fully protected" non-system simple customer premises wiring.

(a) *Scope of this rule*. Provisions of this rule are limited to ''unprotected'' premises wiring used with simple installations of wiring for one and two-line residential and business telephone service. More complex installations of wiring for multiple line services, for use with systems such as PBX and key telephone systems, are controlled by § 68.215 of these rules.

(b) *Wiring authorized*. Unprotected premises wiring may be used to connect units of terminal equipment or protective circuitry to one another, and to carrier-installed facilities if installed in accordance with these rules. The telephone company is not responsible, except pursuant to agreement between it and the customer or undertakings by it, otherwise consistent with Commission requirements, for installation and maintenance of wiring on the subscriber's side of the demarcation point, including any wire or jacks that may have been installed by the carrier. The subscriber and/or premises owner may install wiring on the subscriber's side of the demarcation point, and may remove, reconfigure, and rearrange wiring on that side of the demarcation point including wiring that may have been installed by the carrier. The customer or premises owner may not access carrier wiring and facilities on the carrier's side of the demarcation point. Customers may not access the telephone company-installed protector. All plugs and jacks used in connection with inside wiring shall conform to subpart F of the Commission's rules.

(c) *Material requirements.* Conductors shall have insulation with a 1500 Volt rms breakdown rating. This rating shall be established by covering the jacket or sheath with at least 15 cm (6 in) (measured lineraly on the cable) of conductive foil, and establishing a potential difference between the foil and all of the individual conductors connected together, such potential difference gradually increased over a 30 second time period to 1500 Volts rms, 60 Hertz, then applied continuously for one minute. At no time during this 90 second time interval shall the current between these points exceed 10 milliamperes peak.

(d) *Attestation.* Manufacturers (or distributors or retailers, whichever name appears on the packaging) of non-system telephone premises wire shall attest in a letter to the Commission that the wire conforms with part 68, FCC Rules.

[49 FR 21734, May 23, 1984, as amended at 50 FR 29392, July 19, 1985; 50 FR 47548, Nov. 19, 1985; 51 FR 944, Jan. 9, 1986; 55 FR 28630, July 12, 1990; 58 FR 44907, Aug. 25, 1993]

§68.214 Changes in registered equipment and circuitry.

Changes in registered terminal equipment or registered protective circuitry shall be made as follows:

(a) No change in registered terminal equipment or registered protective circuitry that would result in any change in the information furnished the Commission pursuant to §68.200 may be made, except after grant of a new application made on FCC Form 730.

(b) Changes which do not result in any change in the information furnished the Commission pursuant to §68.200 may be made without express Commission approval. *Provided,* That prior written notification is given the Commission on FCC Form 730.

(c) Where equipment is registered by virtue of incorporation of registered protective circuitry therein, no notification need be given of changes to other than the protective circuitry, its mechanical and electrical connections to the equipment.

(d) Changes in registered terminal equipment or registered protective circuity made pursuant to paragraphs (b) and (c) of this section may be made only by the grantee, or an authorized agent thereof, and the grantee will remain responsible for the performance of such changes.

(e) Operations associated with installing, connecting, reconfiguring or removing (other than final removal) premises wiring to registered terminal equipment or registered protective circuitry are changes in this equipment or circuitry within the meaning of this Section, unless:

(1) The premises wiring involved is ''fully-protected'' premises wiring, or

(2) All such operations are performed in accordance with §68.215.

[42 FR 32244, June 24, 1977, as amended at 43 FR 16499, April 19, 1978]

§68.215 Installation of other than "fully protected" system premises wiring.

(a) *Types of wiring authorized*—(1) *Between equipment entities.* Unprotected premises wiring, and protected premises wiring requiring acceptance testing for imbalance, may be used to connect separately-housed equipment entities to one another.

(2) *Between an equipment entity and the network interface(s).* Fully-protected premises wiring shall be used to connect equipment entities to the telephone network interface unless the local telephone company is unwilling or unable to locate the interface within 7.6 meters (25 feet) of the equipment entity on reasonable request. In any such case, other than fully-protected premises wiring may be used if otherwise in accordance with these rules.

(3) *Hardware protection as part of the telephone company's facilities.* In any case where the carrier chooses to provide (and the customer chooses to accept, except as authorized under paragraph (g) of this section), hardware protection on the network side of the interface(s), the presence of such hardware protection will affect the classification of premises wiring for the purposes of §68.215, as appropriate.

(b) *Installation personnel.* Operations associated with the installation, connection, reconfiguration and removal (other than final removal of the entire premises communications system) of other than fully-protected premises

wiring shall be performed under the supervision and control of a supervisor, as defined in paragraph (c) of this section. The supervisor and installer may be the same person.

(c) *Supervision.* Operations by installation personnel shall be performed under the responsible supervision and control of a person who:

(1) Has had at least six months of on-the-job experience in the installation of telephone terminal equipment or of wiring used with such equipment;

(2) Has been trained by the registrant of the equipment to which the wiring is to be connected in the proper performance of any operations by installation personnel which could affect that equipment's continued compliance with these rules;

(3) Has received written authority from the registrant to assure that the operations by installation personnel will be performed in such a manner as to comply with these rules.

(4) Or, in lieu of paragraphs (c)(1) through (3) of this section, is a licensed professional engineer in the jurisdiction in which the installation is performed.

(d) *Workmanship and material requirements*—(1) *General.* Wiring shall be installed so as to assure that there is adequate insulation of telephone wiring from commercial power wiring and grounded surfaces. Wiring is required to be sheathed in an insulating jacket in addition to the insulation enclosing individual conductors (see below) unless located in an equipment enclosure or in an equipment room with restricted access; it shall be assured that this physical and electrical protection is not damaged or abraded during placement of the wiring. Any intentional removal of wiring insulation (or a sheath) for connections or splices shall be accomplished by removing the *minimum* amount of insulation necessary to make the connection or splice, and insulation equivalent to that provided by the wire and its sheath shall be suitably restored, either by placement of the splices or connections in an appropriate enclosure, or equipment rooms with restricted access, or by using adequately-insulated connectors or splicing means.

(2) *Wire.* Insulated conductors shall have a jacket or sheath with a 1500 volt rms minimum breakdown rating, except when located in an equipment enclosure or an equipment room with restricted access. This rating shall be established by covering the jacket or sheath with at least 15 cm (6 in) (measured linearly on the cable) of conductive foil, and establishing a potential difference between the foil and all of the individual conductors connected together, such potential difference gradually increased over a 30 second time period to 1500 volts rms, 60 Hertz, then applied continuously for one minute. At no time during this 90 second time interval shall the current between these points exceed 10 milliamperes peak.

NOTE: This requirement is patterned after § 68.304.

(3) *Places where the jacket or sheath has been removed.* Any point where the jacket or sheath has been removed (or is not required) shall be accessible for inspection. If such points are concealed, they shall be accessible without disturbing permanent building finish (e.g. by removing a cover).

(4) *Building and electrical codes.* All building and electrical codes applicable in the jurisdiction to telephone wiring shall be complied with. If there are no such codes applicable to telephone wiring, Article 800 of the 1978 National Electrical Code, entitled Communications Systems, and other sections of that Code incorporated therein by reference shall be complied with.

(5) *Limitations on electrical signals.* Only signal sources which emanate from the local telephone company central office, or which are generated in equipment at the customer's premises and are ''non-hazardous voltage sources'' (see § 68.306(b)(4)) may be routed in premises telephone wiring, except for voltages for network control signaling and supervision which are consistent with standards employed by the local telephone company. Current on individual wiring conductors shall be limited to values which do not cause an excessive temperature rise, with due regard to insulation materials and ambient temperatures. The following table assumes a 45° C temperature rise

for wire sizes 22 AWG or larger, and a 40° C rise for wire sizes smaller than 22 AWG, for poly-vinyl chloride insulating materials, and should be regarded as establishing *maximum* values to be derated accordingly in specific installations where ambient temperatures are in excess of 25° C:

MAXIMUM CONTINUOUS CURRENT CAPACITY OF PVC INSULATED COPPER WIRE, CONFINED

Wire size, AWG	Circular mils	Maximum current, amperes
32	63.2	0.32
30	100.5	0.52
28	159.8	0.83
26	254.1	1.3
24	404.0	2.1
22	642.4	5.0
20	1022	7.5
18	1624	10

NOTE: The total current in all conductors of multiple conductor cables may not exceed 20% of the sum of the individual ratings of all such conductors.

(6) *Physical protection.* In addition to the general requirements that wiring insulation be adequate and not damaged during placement of the wiring, wiring shall be protected from adverse effects of weather and the environment in which it is used. Where wiring is attached to building finish surfaces (surface wiring), it shall be suitably supported by means which do not affect the integrity of the wiring insulation.

(e) *Documentation requirements.* A notarized affidavit and one copy thereof shall be prepared by the installation supervisor in advance of each operation associated with the installation, connection, reconfiguration and removal of other than fully-protected premises wiring (except when accomplished functionally using a cross-connect panel), except when involved with removal of the entire premises communications system using such wiring. This affidavit and its copy shall contain the following information:

(1) The responsible supervisor's full name, business address and business telephone number.

(2) The name of the registrant(s) (or manufacturer(s), if grandfathered equipment is involved) of any equipment to be used electrically between the wiring and the telephone network interface, which does not contain inherent protection against hazardous voltages and longitudinal imbalance.

(3) A statement as to whether the supervisor complies with § 68.215(c). Training and authority under § 68.215(c)(2)–(3) is required from the registrant (or manufacturer, if grandfathered equipment is involved) of the first piece of equipment electrically connected to the telephone network interface, other than passive equipments such as extensions, cross-connect panels, or adapters. In general, this would be the registrant (or manufacturer) of a system's common equipment.

(4) The date(s) when placement and connection of the wiring will take place.

(5) The business affiliation of the installation personnel.

(6) Identification of specific national and local codes which will be adhered to.

(7) The manufacturer(s); a brief description of the wire which will be used (model number or type); its conformance with recognized standards for wire if any (*e.g.*, Underwriters Laboratories listing, Rural Electrification Administration listing, ''KS-'' specification, etc.); and a general description of the attachment of the wiring to the structure (*e.g.*, run in conduit or ducts exclusively devoted to telephone wiring, ''fished'' through walls, surface attachment, etc.).

(8) The date when acceptance testing for imbalance will take place.

(9) The supervisor's signature.

The notarized original shall be submitted to the local telephone company at least ten calendar days in advance of the placement and connection of the wiring. This time period may be changed by agreement of the telephone company and the supervisor. The copy shall be maintained at the premises, available for inspection, so long as the wiring is used for telephone service.

(f) *Acceptance testing for imbalance.* Each telephone network interface that is connected directly or indirectly to other than fully-protected premises wiring shall be subjected to the acceptance test procedures specified in this section whenever an operation associated with the installation, connection, reconfiguration or removal of this wiring (other than final removal) has been performed.

(1) *Test procedure for two-way or outgoing lines or loops.* A telephone instrument may be associated directly or indirectly with the line or loop to perform this test if one is not ordinarily available to it:

(i) Lift the handset of the telephone instrument to create the off-hook state on the line or loop under test.

(ii) Listen for noise. Confirm that there is neither audible hum nor excessive noise.

(iii) Listen for dial tone. Confirm that dial tone is present.

(iv) Break dial tone by dialing a digit. Confirm that dial tone is broken as a result of dialing.

(v) With dial tone broken, listen for audible hum or excessive noise. Confirm that there is neither audible hum nor excessive noise.

(2) *Test procedure for incoming-only (non-originating) lines or loops.* A telephone instrument may be associated directly or indirectly with the line or loop to perform this test if one is not ordinarily available to it:

(i) Terminate the line or loop under test in a telephone instrument in the on-hook state.

(ii) Dial the number of the line or loop under test from another station, blocking as necessary other lines or loops to cause the line or loop under test to be reached.

(iii) On receipt of ringing on the line or loop under test, lift the handset of the telephone instrument to create the off-hook state on that line or loop.

(iv) Listen for audible hum or excessive noise. Confirm that there is neither audible hum nor excessive noise.

(3) *Failure of acceptance test procedures.* Absence of dial tone before dialing, inability to break dial tone, or presence of audible hum or excessive noise (or any combination of these conditions) during test of two-way or outgoing lines or loops indicates failure. Inability to receive ringing, inability to break ringing by going off-hook, or presence of audible hum or excessive noise (or any combination of these conditions) during test of incoming-only lines or loops indicates failure. Upon any such failure, the failing equipment or portion of the premises communications system shall be disconnected from the network interface, and may not be reconnected until the cause of the failure has been isolated or removed. Any previously tested lines or loops shall be retested if they were in any way involved in the isolation and removal of the cause of the failure.

(4) *Monitoring or participation in acceptance testing by the local telephone company.* The local telephone company may monitor or participate in the acceptance testing required under this section, in accordance with § 68.215(g) of this part, from its central office test desk or otherwise.

(g) *Extraordinary procedures.* The local telephone company is hereby authorized to limit the subscriber's right of connecting FCC-registered terminal equipment or protective circuitry with other than fully-protected premises wiring, but solely in accordance with this subsection and § 68.108 of these rules.

(1) *Conditions which may invoke these procedures.* The extraordinary procedures authorized herein may only be invoked where one or more of the following conditions is present:

(i) Information provided in the supervisor's affidavit gives reason to believe that a violation of part 68 of the FCC's rules is likely.

(ii) A failure has occurred during acceptance testing for imbalance.

(iii) Harm has occurred, and there is reason to believe that this harm was a result of wiring operations performed under this section.

The extraordinary procedures authorized in the following sub-sections shall not be used so as to discriminate between installations by local telephone company personnel and installations by others. In general, this would require that any charges for these procedures be levied in accordance with, or analgous to, the ''maintenance of service'' tariff provisions: If the installation proves satisfactory, no charge should be levied.

(2) *Monitoring or participation in acceptance testing for imbalance.* Notwithstanding the previous sub-section, the local telephone company may monitor or particapate in acceptance testing for imbalance at the time of the initial installation of wiring in the absence of the conditions listed therein; at any other time, one or more of the listed

conditions shall be present. Such monitoring or participation in acceptance testing should be performed from the central office test desk where possible to minimize costs.

(3) *Inspection.* Subject to paragraph (g)(1) of this section, the local telephone company may inspect wiring installed pursuant to this section, and all of the splicing and connection points required to be accessible by § 68.215(d)(3) to determine compliance with this section. The user or installation supervisor shall either authorize the telephone company to render the splicing and inspection points visible (e.g. by removing covers), or perform this action prior to the inspection. To minimize disruption of the premises communications system, the right of inspecting is limited as follows:

(i) During initial installation of wiring:

The telephone company may require withdrawal of up to 5 percent (measured linearly) of wiring run concealed in ducts, conduit or wall spaces, to determine conformance of the wiring to the information furnished in the affidavit.

(ii) After failure of acceptance testing or after harm has resulted from installed wiring:

The telephone company may require withdrawal of all wiring run concealed in ducts, conduit or wall spaces which reasonably could have caused the failure of harm, to determine conformance of the wiring to the information furnished in the affidavit.

In the course of any such inspection, the telephone company shall have the right to inspect documentation required to be maintained at the premises under § 68.215(e).

(4) *Requiring the use of protective apparatus.* In the event that any of the conditions listed in paragraph (g)(1) of this section, arises, and is not permanently remedied within a reasonable time period, the telephone company may require the use of protective apparatus which either protects solely against hazardous voltages, or which protects both against hazardous voltages and imbalance. Such apparatus may be furnished either by the telephone company or by the customer. This right is in addition to the telephone company's rights under § 68.108.

(5) *Notice of the right to bring a complaint.* In any case where the telephone company invokes the extraordinary procedures of § 68.215(g), it shall afford the customer the opportunity to correct the situation which gave rise to invoking these procedures, and inform the customer of the right to bring a complaint to the Commission pursuant to the procedures set forth in subpart E of this part. On complaint, the Commission reserves the right to perform any of the inspections authorized under this section, and to require the performance of acceptance tests.

(h) *Limitations on the foregoing if protected wiring requiring acceptance testing is used.* If protected wiring is used which required acceptance testing, the requirements in the foregoing paragraphs of § 68.215 are hereby limited, as follows:

(1) *Supervision.* Section 68.215(c)(2)–(3) are hereby waived. The supervisor is only required to have had at least six months of on-the-job experience in the installation of telephone terminal equipment or of wiring used with such equipment.

(2) *Extraordinary procedures.* Section 68.215(g)(3) is hereby limited to allow for inspection of exposed wiring and connection and splicing points, but not for requiring the withdrawal of wiring from wiring run concealed in ducts, conduit or wall spaces unless actual harm has occurred, or a failure of acceptance testing has not been corrected within a reasonable time. In addition, § 68.215(g)(4) is hereby waived.

[43 FR 16499, Apr. 19, 1978, as amended at 44 FR 7958, Feb. 8, 1979; 47 FR 37896, Aug. 27, 1982; 49 FR 21735, May 23, 1984; 58 FR 44907, Aug. 25, 1993]

§ 68.216 Repair of registered terminal equipment and registered protective circuitry.

Repair of registered terminal equipment and registered protective circuitry shall be accomplished only by the manufacturer or assembler thereof or by their authorized agent; however, routine repairs may be performed by a user, in accordance with the instruction manual if the applicant certifies

that such routine repairs will not result in noncompliance with the rules and regulations in subpart D of this part.

§ 68.218 Responsibility of grantee of equipment registration.

(a) In applying for a grant of an equipment registration, the grantee warrants that each unit of equipment marketed under such grant will comply with all the applicable rules and regulations in subpart D of this part.

(b) The grantee or its agent shall provide the user of the registered equipment the following:

(1) Instructions concerning installation, operational and repair procedures, where applicable.

(2) Instructions that registered terminal equipment or protective circuitry may not be used with party lines or coin lines.

(3) Instructions that when trouble is experienced the customer shall disconnect the registered equipment from the telephone line to determine if the registered equipment is malfunctioning and that if the registered equipment is malfunctioning, the use of such equipment shall be discontinued until the problem has been corrected.

(4) Instructions that the user must give notice to the telephone company in accordance with the requirements of § 68.106, and instructions specifying the Universal Service Order Code(s), other than RJ11 (see § 68.502), of means of connection of the equipment which may be required to be ordered from the telephone company if not already installed.

(5) For a telephone which is not hearing aid-compatible, as defined in § 68.316 of these rules:

(i) Notice that FCC rules prohibit the use of that handset in certain locations; and

(ii) A list of such locations (see § 68.112).

(6) For registered devices used in connection with 1.544 Mbps digital services, instructions that the user must notify the telephone company prior to disconnection of such registered devices.

A telephone company which provides and installs the registered equipment need only provide the user with the information required in paragraphs (b)(1), (3) and (5) of this section.

(c) When registration is revoked for any item of equipment, the grantee is responsible to take all reasonable steps to ensure that purchasers and users of such equipment are notified of such revocation and are notified to discontinue use of such equipment.

(d) The grantee or its agent shall assure that any registered equipment or circuitry which is offered to a user shall be equipped with standard means of connection to the telephone network specified in subpart F of this part.

[41 FR 8049, Feb. 24, 1976, as amended at 42 FR 32244, June 24, 1977; 49 FR 1363, Jan. 11, 1984; 50 FR 48209, Nov. 22, 1985]

§ 68.220 Cross reference.

Applications for registration of terminal equipment or protective circuitry shall, in addition to the requirements of this subpart, comply with the provisions of subpart L of part 2 of this chapter.

[42 FR 32244, June 24, 1977]

§ 68.222 AIOD trunk and station number verification.

(a) *Verification requirements*—(1) *General.* The proper identification of 4-digit PBX-central office trunk numbers and PBX station numbers for purposes of Automatic Identified Outward Dialing (AIOD) shall be verified as a part of initial installation and subsequent installer performed additions to and rearrangements of AIOD functions.

(2) *Trunk numbers.* A 4-digit trunk number identified for each PBX-central office trunk, when seized, shall be the same as the 4-digit trunk number assigned by the telephone company at the PBX-central office trunk interface.

(3) *Station numbers.* The 4-digit station number identified for each station, incoming tie trunk, and the attendant when connected to a PBX-central office trunk shall be verified to:

(i) Be in the group of station numbers assigned by the telephone company and,

(ii) Be the same as the number assigned to or intended to correspond uniquely to the station, tie trunk, or attendant.

(b) *Verification personnel.* Operations associated with the verification of AIOD trunk and station number assignments shall be performed under the supervision and control of a supervisor, as defined in paragraph (c) of this section. The supervisor and installer may be the same person.

(c) *Supervision.* Operations by installation personnel shall be performed under the responsible supervision and control of a person who:

(1) Has at least six months of on-the-job experience in the installation of telephone terminal equipment;

(2) Has been trained by the registrant in the operation of the AIOD feature and in the performance of operations needed to verify proper identification procedures and results.

(3) Or, in lieu of paragraphs (c)(1) and (c)(2) of this section, is a licensed professional engineer in the jurisdiction in which the installation is performed.

(d) *Verification procedure.* The installation supervisor shall notify the telephone company that the required verification tests have been performed. Such notification need not be made in writing. Such notification shall include the following information:

(1) The responsible supervisor's full name, business address and business telephone number; and

(2) The date when AIOD service involving the trunk and station numbers verified will start, the date when the verification test took place, and a list of the trunk and station numbers actually assigned.

[45 FR 20853, Mar. 31, 1980]

§68.224 Notice of non-hearing aid compatibility.

Every non-hearing aid compatible telephone offered for sale to the public on or after August 17, 1989, whether previously-registered, newly registered or refurbished shall:

(a) Contain in a conspicuous location on the surface of its packaging a statement that the telephone is not hearing aid compatible, as is defined in §§68.4(a)(3) and 68.316, or if offered for sale without a surrounding package, shall be affixed with a written statement that the telephone is not hearing aid-compatible, as defined in §§68.4(a)(3) and 68.316; and

(b) Be accompanied by instructions in accordance with §68.218(b)(5) of the rules.

[54 FR 21431, May 18, 1989, as amended at 61 FR 42187, Aug. 14, 1996]

EFFECTIVE DATE NOTE: At 61 FR 42187, Aug. 14, 1996, in §68.224, paragraph (a) was revised, effective Oct. 23, 1996. For the convenience of the user, the superseded text is set forth as follows:

§68.224 Notice of non-hearing aid compatibility.

* * * * *

(a) Contain in a conspicuous location on the surface of its packaging a statement that the telephone is not hearing aid-compatible, as is defined in §68.4(a)(3) of these rules, or if offered for sale without a surrounding package, shall be affixed with a written statement that the telephone is not hearing aid-compatible, as defined in §68.4(a)(3) of these rules; and

* * * * *

§68.226 Registration of digital systems components.

Registered terminal equipment for connection to digital services may be registered as a component of a terminal equipment system. Such terminal equipment shall be connected to digital services only in a manner consistent with the registration code contained as part of the FCC registration number. Such codes shall be determined and assigned in the administration of the registration program.

[50 FR 48209, Nov. 22, 1985]

Subpart D—Conditions for Registration

AUTHORITY: Secs. 4, 5, 303, 48 Stat., as amended, 1066, 1068, 1082 (47 U.S.C. 154, 155, 303).

SOURCE: 45 FR 20853, Mar. 31, 1980, unless otherwise noted.

§68.300 Labelling requirements.

(a) Registered terminal equipment and registered protective circuitry shall have prominently displayed on an outside surface the following information in the following format:

Complies With Part 68, FCC Rules
FCC Registration Number _____

Ringer Equivalence

(b) Registered terminal equipment and registered protective circuitry shall also have the following identifying information permanently affixed thereto:

(1) Grantee's name

(2) Model number, as specified in the registration application

(3) Serial number or date of manufacture.

(4) Country of origin of the equipment: Made in ———. Required if the equipment is not manufactured in the United States. Country of origin shall be determined in accordance with 19 U.S.C. 1304 and regulations promulgated thereunder.

(5) As used herein, ''permanently affixed'' means that the required nameplate data is etched, engraved, stamped, indelibly printed or otherwise permanently marked. Alternatively, the required information may be permanently marked on a nameplate of metal, plastic, or other material fastened to the enclosure by welding, riveting, etc., or with a permanent adhesive. Such a nameplate must be able to last the expected lifetime of the equipment in the environment in which the equipment will be operated and must not be readily detachable.

(c) As of April 1, 1997, all registered telephones, including cordless telephones, as defined in § 15.3(j) of this chapter, manufactured in the United States (other than for export) or imported for use in the United States, that are hearing aid compatible, as defined in § 68.316, shall have the letters ''HAC'' permanently affixed thereto. ''Permanently affixed'' shall be defined as in § 68.300(b)(5). Telephones used with public mobile services or private radio services, and secure telephones, as defined by § 68.3, are exempt from this requirement.

EDITORIAL NOTE: At 61 FR 42392, Aug. 15, 1996, the following paragraph (c) was added to § 68.300, effective Nov. 13, 1996.

(c) When the device is so small or for such use that it is not practical to place the labelling information specified in paragraphs (a) and (b) of this section, the information required by these paragraphs shall be placed in a prominent place in user instructions. The FCC Registration Number and the device Model Number, however, must be displayed on the device. All lettering on the label must be discernible without magnification.

[45 FR 20853, Mar. 31, 1980, as amended at 51 FR 944, Jan. 9, 1986; 61 FR 42187, Aug. 14, 1996; 61 FR 42392, Aug. 15, 1996]

EFFECTIVE DATE NOTE: At 61 FR 42187, Aug. 14, 1996, in § 68.300, paragraph (c) was added, effective Oct. 23, 1996.

§ 68.302 Environment simulation.

Registered terminal equipment and registered protective circuitry shall comply with all the criteria contained in the rules and regulations in this subpart, both prior to and after the application of each of the mechanical and electrical stresses specified in this section, not withstanding that certain of these stresses may result in partial or total destruction of equipment.

(a) *Vibration*. The equipment shall be subjected to vibration while in the condition that it is normally shipped or transported. That is, during the following vibration test the equipment shall be vibrated while packaged if shipped packaged, or the equipment shall be vibrated while unpackaged if shipped unpackaged. The following sinusoidal vibration should be applied once in each of three orthogonal directions, however, for large equipments, the unit should rest on the base or side on which it is normally shipped: One sweep at a level of 0.5g peak from 5 to 100 Hz, and one sweep at a level of 1.5g peak from 100 to 500 Hz. The 5 to 100 Hz sweep should be conducted at a sweep rate of 0.1 octave/min. (approximately 45 minutes) and the 100 to 500 Hz sweep at a rate of 0.25 octave/min. (approximately 10 minutes).

(b) *Temperature and humidity*. Cycling at any convenient rate through the following temperature and humidity conditions three times: 30 minutes at 65° C (150° F) and 15 percent relative humidity, followed by 30 minutes at 32° C (90° F) and 90 percent relative humidity, followed by 30 minutes at −40° C (−40° F) and any convenient humidity.

(c) *Shock*. (1) Registered Terminal Equipment and Registered Protective Circuitry Equipment Unpackaged:

Hand-Held Items Normally Used at Head Height:

18 random drops from a height of 150 cm (60 in) onto concrete covered with 3 mm (⅛ in) asphalt tile or similar surface.

Normally Customer Carried Equipment:

6 random drops from a height of 75 cm (30 in) onto concrete covered with 3 mm (⅛ in) asphalt tile or similar surface.

Equipment Not Normally Customer Carried:

These tests are made onto concrete covered with 3 mm (⅛ in) asphalt tile or similar surface.

0–10 kg (0–20 lbs): One 15 cm (6 in) face drop on each normal or designated rest face, one 7 cm (3 in) drop on all other faces, and one 7 cm (3 in) corner drop on each corner.

10–20 kg (20–50 lbs): One 10 cm (4 in) face drop on each normal or designated rest face, one 5 cm (2 in) face drop on all other faces, and one 5 cm (2 in) corner drop on each corner.

20–50 kg (50–100 lbs): One 5 cm (2 in) face drop on each normal or designated rest face. One edgewise drop and one cornerwise drop from a height of 5 cm (2 in) on each edge and corner adjacent to the rest face.

50–500 kg (100–1000 lbs): One 2 cm (1 in) face drop on each normal or designated rest face. One edgewise drop and one cornerwise drop from a height of 2 cm (1 in) on each edge and corner adjacent to the rest face.

Over 500 kg (1,000 lbs): One 2 cm (1 in) face drop on each normal or designated rest face. One edgewise drop from a height of 2 cm (1 in) on each edge adjacent to this rest face.

(2) The drop tests specified in the mechanical shock conditioning stresses shall be performed as follows:

FACE DROP—The unit should be dropped such that the face to be struck is approximately parallel to the impact surface.

CORNER DROP—The unit should be dropped such that upon impact a line from the struck corner to the center of gravity of the packaged equipment is approximately perpendicular to the impact surface.

EDGEWISE DROP—The unit should be positioned on a flat test surface. One edge of the rest face should be supported with a block so that the rest face makes an angle of 20° with the horizontal. The opposite edge should be lifted the designated height above the test surface and dropped.

CORNERWISE DROP—The unit should be positioned on a flat test surface. One corner of the test face should be supported with a block so that the rest face makes an angle of 20° with the horizontal. The opposite corner should be lifted the designated height above the test surface and dropped.

RANDOM DROP—The unit should be positioned prior to release to ensure as nearly as possible that for every six drops there is one impact on each of the six major surfaces and that the surface to be struck is approximately parallel to the impact surface.

(d) *Metallic voltage surge.* Two 800-volt peak surges of a metallic voltage (one of each polarity) having a 10-microsecond *maximum* rise time to crest and a 560-microsecond *minimum* decay time to half crest applied between (1) tip and ring of a 2-wire connection; (2) between tip and ring, and tip 1 and ring 1 of a 4-wire connection; (3) between tip and tip 1 (with tip and ring tied together and tip 1 and ring 1 tied together) of a 4-wire connection which uses simplexed pairs for signaling; and (4) any other pair of connections on which lightning surges may occur (with one of the connections of the pair under test grounded) with the equipment in each of the following states:

(i) Any operational state which can affect compliance with the requirements of part 68;

(ii) Any state in which the equipment might be connected to the telephone network and from which it is capable of transferring to an operational state by an automatic or manual action required for proper use of the equipment and provided that any such state can affect compliance with the requirements of part 68; and

(iii) Any state in which the equipment might be connected to the telephone network through an automatic or manual action under all reasonably foreseeable possibilities of disconnection of connections of such equipment with primary commercial power sources (including possible loss of equipment grounding through disconnection of a third-wire ground connection contained in a primary power source plug).

All other equipment leads (telephone connections, auxiliary leads, and terminals for connection to nonregistered equipment) not being surged or connected to those being surged should be terminated in a manner which is no less severe than that which occur in normal use and affect compliance with subpart D. Also, equipment states which cannot be achieved by normal means of power shall be achieved artificially by appropriate means, if necessary to comply with the above requirements. The peak current drawn

from the surge generator must not be limited to less than 100 amperes by the capabilities of the surge generator except for the simplexed arrangement in case (3), which must not be limited to less than 200 amperes.

(e) *Longitudinal voltage surge.* With registered terminal equipment in each of the following states: first, any operational state which can affect compliance with the requirements of part 68, second, any state in which the equipment might be connected to the telephone network and from which it is capable of transferring to an operational state by an automatic or manual action required for proper use of the equipment and provided that each state can affect compliance with the requirements of part 68 and third, any state in which the equipment might be connected to the telephone network through an automatic or manual action under all reasonably foreseeable possibilities of disconnection of connections of such equipment with primary commercial power sources (including possible loss of equipment grounding through disconnection of a third-wire ground connection contained in a primary power source plug):

(1) Two 1500 volt peak surges (one of each polarity) having a 10 microsecond *maximum* rise time to crest and a 160 microsecond *minimum* decay time to half crest applied separately between each of the following leads individually and (i) and (ii) below, and where available, also between all of the following leads tied together and (i) and (ii) below: Tip, ring, tip 1, ring 1, M (only for registered terminal equipment located on the ''A'' side of a Type I E&M interface).

(i) Earth ground; and

(ii) All leads on the registered equipment intended for connection to non-registered equipment when these leads are connected together.

The peak current drawn from the surge generator must not be limited to less than 200 amperes by the capabilities of the surge generator.

(2) Two 1500 volt peak surges (one of each polarity) having a 10 microsecond *maximum* rise time to crest and a 160 microsecond *minimum* decay time to half crest applied between pairs of connections other than tip and ring on which lightning surges may occur, connected together, and individually to (i) and (ii) below:

(i) Earth ground; and

(ii) All leads on the registered equipment intended for connection to non-registered equipment when these leads are tied together.

The peak current drawn from the surge generator shall not be limited to less than 200 amperes by the capabilities of the surge generator.

(3) Six 2500 volt peak surges (three of each polarity) having a 2 microsecond *maximum* rise time to crest and a 10 microsecond *minimum* decay time to half crest applied between the phase and neutral terminals of the ac power line. The peak current drawn from the surge generator must not be limited to less than 1000 amperes by the capabilities of the surge generator.

All other equipment leads (telephone connections, auxiliary leads, and terminals for connection to non-registered equipment) not being surged or connected to those being surged should be terminated in a manner which is no less severe than that which would occur in normal use and affect compliance with subpart D. Also, equipment states which cannot be achieved by normal means of power shall be achieved artificially by appropriate means, if necessary to comply with the above requirements.

(f) *Failure modes resulting from the application of metallic and longitudinal surges.* Registered terminal equipment and registered protective circuitry are permitted to reach a failure-mode state in violation of longitudinal balance requirements of § 68.310, and for terminal equipment connected to Local Area Data Channels a failure-mode state in violation of the longitudinal signal power requirements of § 68.308, after application of the electrical surges specified in paragraphs (d) and (e) herein, provided that:

(1) Such failure results from an intentional, designed failure mode which has the effect of connecting telephone or auxiliary connections with earth ground; and,

(2) If such a failure-mode state is reached, the equipment is designed in such a manner that it would become substantially and noticeably unusable

by the user, or an indication is given to the user (e.g., an alarm), in order that such equipment can be immediately disconnected or repaired.

NOTE: The objective of this subsection is to allow for safety circuitry which diverts lightning-like transients to earth ground, but which may continue to maintain the earth ground connections after the transients have ceased. Such a failure-mode has the potential for causing interference resulting from longitudinal imbalance, and therefore designs must be adopted which will cause the equipment either to be disconnected or repaired rapidly after such a state is reached, should it occur in service. This subsection does not apply to tie trunk interface leads.

[45 FR 20853, Mar. 31, 1980, as amended at 50 FR 47549, Nov. 19, 1985; 51 FR 944, Jan. 9, 1986; 51 FR 16689, May 6, 1986; 58 FR 44907, Aug. 25, 1993]

§68.304 Leakage current limitations.

Registered terminal equipment and registered protective circuitry shall assure that, if a voltage source is connected to the combinations listed in the table below, of the following points on such equipment:

(a) All telephone connections,

(b) All power connections,

(c) All possible combinations of exposed conductive surfaces on the exterior of such equipment or circuitry excluding terminals for connection to other terminal equipment,

(d) All terminals for connection to nonregistered equipment,

(e) Points having a conducting path to the secondaries of any power supply,

(f) All auxiliary lead terminals, and

(g) All E&M lead terminals,

(h) All PR, PC, CY1 and CY2 leads,

and is gradually increased, from zero to the values listed in the table below, over a thirty second time period, then applied continuously for one minute, the current in the mesh formed by the voltage source and these points shall not exceed 10 milliamperes peak at any time during this 90 second time interval.

VOLTAGE APPLIED FOR VARIOUS COMBINATIONS OF ELECTRICAL CONNECTIONS

Voltage sources connected between	Value*
(a) and (c) note (5)	1000
(a) and (d) note (5)	1000
(a) and (f) note (5)	1000

VOLTAGE APPLIED FOR VARIOUS COMBINATIONS OF ELECTRICAL CONNECTIONS—Continued

Voltage sources connected between	Value*
(a) and (g) note (5)	1000
(a) and (h) note (6)	1000
(b) and (c)	1500
(b) and (d)	1500
(b) and (e)	1500
(b) and (h)	1500
(c) and (f)	1000
(c) and (g)	1000
(d) and (f)	1000
(d) and (g)	1000
(f) and (h)	1000

*Value to which test voltage is gradually increased, rms, 60 Hertz.

NOTES: (1) If, in any operational state, one of the telephone connections, auxiliary leads or E&M leads has an intentional conducting path to earth ground, that lead may be excluded from the leakage current test in that operational state. Connections excluded for this reason must comply with the requirements of §68.306(c) in addition to the other applicable rules. However, leakage current tests between telephone connections and auxiliary leads, and between telephone connections and E&M leads are required unless both points have intentional conducting paths to earth ground.

(2) Terminal port connections to registered protective circuitry shall be treated as point (d) leads for the purposes of leakage current limitation.

(3) Leakage current limitations shall be met between each of the point (d) and point (f) leads and all pairs of tip and ring telephone connections. (Testing all pairs may be done by a sequence of appropriate combinations of pairs.)

(4) Equipment states which cannot be achieved by normal means of power shall be achieved artifically by appropriate means, if necessary to comply with the requirements of this section.

(5) For multi-unit equipment interconnected by cables, which is evaluated and registered as an interconnected combination or assembly, the specified 10 milliamperes peak maximum leakage current limitation, other than between power connection points and other points, may be increased as described here to accommodate cable capacitance. The leakage current limitation may be increased to (10N+0.13L) milliamperes peak where L is the length of interconnecting cable in the leakage path in meters and N is the number of equipment units which the combination or assembly will place in parallel across a telephone connection. However, all combinations of electrical connections requiring the increased limitation and involving point (c) (exposed conductive surfaces) surfaces must comply with the requirements of §68.306(c) in addition to other applicable rules.

(6) Leakage current limitations shall be met between each of the point (h) leads and all pairs of tip and ring telephone connections.

[45 FR 20853, Mar. 31, 1980, as amended at 51 FR 944, Jan. 9, 1986; 58 FR 44907, Aug. 25, 1993]

§ 68.306 Hazardous voltage limitations.

(a) *General.* Under no condition of failure of registered terminal equipment or registered protective circuitry, or of equipment connected thereto, which can be conceived to occur in the handling, operation or repair of such equipment or circuitry, shall the open circuit voltage on telephone connections exceed 70 volts peak for more than one second, except for voltages for network control signaling and supervision, which, in any case, should be consistent with standards employed by the telephone companies.

(1) Registered terminal equipment shall assure that at the MR channel interface, no continuous ac or dc voltages appear across the tip (MR) and ring (MR) leads, from the tip (MR) lead to PBX ground, or from the ring (MR) lead to PBX ground.

(2) Registered terminal equipment shall assure that during normal operation, at an AIOD data channel interface, (i) no significant ac voltage to ground other than for data transmission appears on the tip (AI) and ring (AI) leads; (ii) no open circuit dc voltage to ground appears on the tip (AI) and ring (AI) leads other than in the range from 0 to −56.5 volts.

(3) Registered terminal equipment shall also assure that at either the MR channel interface or an AIOD data channel interface, voltage transients appearing on either the tip (AI or MR) or ring (AI or MR) to ground as a result of inductive components in the registered terminal equipment shall not be capable of delivering more than 2 joules to a 500 ohm resistive termination.

(4) *Type I E&M leads.* Conditions for ''A'' side of interface with conditions for ''B'' side in parentheses. Registered terminal equipment shall assure that the dc current in the E lead does not exceed 100 milliamperes, no significant ac voltage to ground appears on the E&M leads,* no significant ac or dc voltage to ground appear on the (E) & (M) leads,* and the open circuit dc voltage to ground on the E&M leads does not exceed 56.5 volts and is not positive. M lead protection shall be provided to assure that voltages to ground do not exceed 80 volts. For relay contact implementation a power dissipation capability of 0.5 watt shall be provided in the shunt path. If the registered terminal equipment contains an inductive component in the E lead, it must assure that the transient voltage across the contact as a result of a relay contact opening, does not exceed the following voltage and duration limitations:

(i) 300 volts peak,

(ii) A rate of change of one volt per microsecond, and

(iii) An 80 volt level for more than 10 milliseconds.

(5) *Type II E&M leads.* Conditions for ''A'' side of interface with conditions for ''B'' side in parentheses. Registered terminal equipment shall assure that the dc current in the E and (SB) leads does not exceed 100 milliamperes and no significant ac voltage to ground appears on the E and (SB) leads,* no significant ac or dc voltages to ground appear on the M, SG, SB (E), (SG), and (M) leads from sources in the registered terminal equipment,* and the open circuit dc voltage to ground on the E and (SB) leads does not exceed 56.5 volts and is not positive. If the registered terminal equipment contains an inductive component in the E or (M) lead, it must assure that the transient voltage across the contact, as a result of a relay contact opening, does not exceed the following voltage and duration limitations;

(i) 300 volts peak,

(ii) A rate of change of one volt per microsecond, and

(iii) An 80 volt level for more than 10 milliseconds.

(6) *Off-premises station voltages.* (i) Talking battery or voltages applied by the PBX (or similar systems) to OPS interface leads for supervisory purposes must be negative with respect to ground, shall not exceed 56.5V dc for

*The ac component should not exceed 5 volts peak or the dc component 5 volts, where not otherwise controlled by § 68.308.

Classes A, B, and C, and shall not have a significant ac component.*

(ii) Ringing signals applied by the PBX (or similar systems) to OPS interface leads shall be applied for the purpose of station alerting only, and shall comply with requirements in paragraph (d) of this section. Ringing voltages shall be applied between the ring conductor and ground.

(7) For Local Area Data Channel interfaces, during normal operating modes including terminal equipment initiated maintenance signals, registered terminal equipment shall assure, except during the application of ringing (limitations specified in paragraph (d) of this section), with respect to telephone connections (tip, ring, tip 1, ring 1) that:

(i) Under normal operating conditions, the rms current per conductor between short-circuited conductors, including dc and ac components, does not exceed 350 milliamperes. For other than normal operating conditions, the rms current between any conductor and ground or between short-circuited conductors, including dc and ac components, may exceed 350 milliamperes for no more than 1.5 minutes.

(ii) The dc voltage between any conductor and ground does not exceed 80 volts. Under normal operating conditions it shall not be positive with respect to ground (though positive voltages up to 80 volts may be allowed during brief maintenance states);

(iii) Ac voltages are less than 42.4 volts peak between any conductor and ground, (Terminal equipment shall comply while other interface leads are both (A) unterminated and (B) individually terminated to ground); and,

(iv) Combined ac and dc voltages between any conductor and ground are less than 42.4 volts peak when the absolute value of the dc component is less than 21.2 volts, and less than (28.8 + 64 × Vdc) when the absolute value of the dc component is between 21.2 and 80 volts.

(8) During normal operation, registered terminal equipment for connection to ringdown voiceband private line interfaces or voiceband metallic channel interfaces shall assure that:

(i) Ringing voltage is used for alerting only, does not exceed the voltage and current limits specified in paragraph (d), and is:

(A) Applied to the ring conductor with the tip conductor grounded for 2-wire interfaces, or

(B) Simplexed on the tip and ring conductors with ground simplexed on the tip (1) and ring (1) conductors for 4-wire interfaces.

(ii) Except during the signaling mode or for monitoring voltage, there is no significant positive dc voltage with respect to ground (not over +5 volts):

(A) For 2-wire ports between the tip lead and ground and the ring lead and ground, and

(B) For 4-wire ports between the tip lead and ground, the ring lead and ground, the tip 1 lead and ground, and the ring 1 lead and ground.

(iii) The dc current per lead, under short circuit conditions shall not exceed 140 milliamperes.

(b) *Connection of nonregistered equipment to registered terminal equipment or registered protective circuitry*—(1) *General.* Leads to, or any elements having a conducting path to telephone connections, auxiliary leads or E&M leads shall:

(i) Be reasonably physically separated and restrained from and be neither routed in the same cable as nor use the same connector as leads or metallic paths connecting power connections;

(ii) Be reasonably physically separated and restrained from and be neither routed in the same cable as nor use adjacent pins on the same connector as metallic paths to leads to nonregistered equipment, when specification details provided to the Commission pursuant to § 68.200(g) do not show that interface voltages are less than non-hazardous voltage source limits in § 68.306(b)(4).

(2) *Connections to registered terminal equipment.* The voltage measurable between auxiliary leads, auxiliary leads to ground, E&M leads and ground, tip and ring, tip to ground, ring to ground, tip 1 and ring 1, tip 1 to ground, and ring 1 to ground shall not exceed 70 volts peak for more than 1 second, with tip to ring, tip 1 to ring 1, and auxiliary lead to auxiliary lead each terminated with 1500 ohms center-tapped through 1000 ohms to ground and each E&M

lead terminated in 1500 ohms to ground, if 120 volts rms 60 Hz, ac is applied between all connections to other equipment tied together (except connections to non-hazardous voltage sources) and ground. The source shall not be limited to less than 20 amperes continuously, not to less than 50 amperes for 1 minute, and shall not be interrupted by an overcurrent device permitting less total energy flow than a 20 ampere time delay fuse or breaker.

(3) *Connections to registered protective circuitry*. The voltage measurable between auxiliary leads, auxiliary leads to ground, E&M leads and ground, tip and ring, tip to ground, ring to ground, tip 1 and ring 1, tip 1 to ground, and ring 1 to ground shall not exceed 70 volts peak for more than 1 second, with tip to ring, tip 1 to ring 1 and auxiliary lead to auxiliary lead each terminated with 1500 ohms, center-tapped through 1000 ohms to ground, and each E&M lead terminated in 1500 ohms to ground if either 120 or 300 volts rms to 60 Hz. ac is applied:

(i) Between all protective circuitry connections other than telephone connections (and connection to non-hazardous voltage sources), tied together and ground; and

(ii) Across all protective circuitry connections, other than telephone connections (and connections to non-hazardous voltage sources) which have a transmission path to the telephone connections, with alternative leads grounded; under all reasonable applications of earth ground to the protective circuitry. The source shall not be limited to less than 20 amperes continuously, nor to less than 50 amperes for 1 minute, and shall not be interrupted by an overcurrent device permitting less total energy flow than a 20 ampere time delay fuse or breaker.

(4) *Non-hazardous voltage source.* A voltage source is considered a non-hazardous voltage source if it conforms with the requirements of §§68.302, 68.304, and 68.306(b)(1), with all connections to the source other than primary power connections treated as ''telephone connections,'' and if such source supplies voltages no greater than the following under all modes of operation and of failure:

(i) Ac voltages less than 42.4 volts peak;

(ii) Dc voltages less than 80 volts; and

(iii) Combined ac and dc voltages less than 42.4 volts peak when the absolute value of the dc component is less than 21.2 volts and less than (28.8 + 0.64 × V dc) when the absolute value of the dc component is between 21.2 and 80 volts.

(c) *Hazards from exposed surfaces (to be applied for intentional conductive paths to ground as required by §68.304).* The voltage measurable between auxiliary leads, auxiliary leads to ground, E&M leads and ground, tip and ring, tip and ground, ring and ground, tip 1 and ring 1, tip 1 and ground, ring 1 and ground, shall not exceed 70 volts peak for more than 1 second, with tip to ring, tip 1 and ring 1, and auxiliary lead to auxiliary lead each terminated with 1500 ohms, center-tapped through 1000 ohms to ground, and each E&M lead terminated in 1500 ohms to ground, if 120 volts rms 60 Hz. ac is applied between conductive exposed surfaces and ground. The source shall not be limited to less than 20 amperes continuously, nor to less than 50 amperes for 1 minute, and shall not be interrupted by an overcurrent device permitting less total energy flow than a 20 ampere time delay fuse or breaker.

(d) *Ringing sources.* Ringing sources, except for class A OPS interfaces, shall meet all of the following restrictions:

(1) The ringing signal shall use only frequencies whose fundamental component is equal to or below 70 Hz.[2]

(2) The ringing voltage shall be less than 300 V peak-to-peak and less than 200 V peak-to-ground across a resistive termination of at least 1 megohm.

(3) The ringing voltage shall be interrupted to create quiet intervals of at least one second (continuous) duration each separated by no more than 5 seconds. During the quiet intervals, the voltage to ground shall not exceed the voltage limits given in paragraph (a)(6)(i) of this section.

(4) As specified below, ringing sources shall be required to (*a*) include a series current-sensitive tripping device in the ring lead which will trip ringing as specified in Figure 68.306(d), and/or (*b*)

[2] 33 Hz may be the highest frequency necessary for OPS service.

provide a voltage to ground (monitoring voltage) on the tip or ring conductor with a magnitude of at least 19 volts peak (but may not exceed the voltage limits given in paragraph (a)(6)(i) of this section) whenever the ringing voltage is not present (idle state). Tripping devices and/or monitoring voltages are required dependent upon the current flow through a specified resistance connected between the ringing source (R(OPS)) and ground as follows:

(i) If the current through a 500 ohms (and greater) resistor does not exceed 100 mA peak-to-peak, neither a tripping device nor a monitoring voltage are required, or

(ii) If the current through a 1500 ohms (and greater) resistor exceeds 100 mA peak-to-peak, the ringing source shall include a tripping device. If the tripping device meets the operating characteristics as specified in Figure 68.306(d) with R=500 ohms (and greater), then no monitoring voltage is required. If, however, the tripping device only meets the given operating characteristics with R=1500 ohms (and greater), then the ringing source must also include a monitoring voltage as described above, or

(iii) If the current through a 500 ohms (and greater) resistor exceeds 100 mA peak-to-peak but does not exceed this value of current with a 1500 ohms (and greater) termination, the ringing source shall include either a tripping device which meets the operating characteristics as specified in Figure 68.306(d) with R=500 ohms (and greater), or a monitoring voltage.

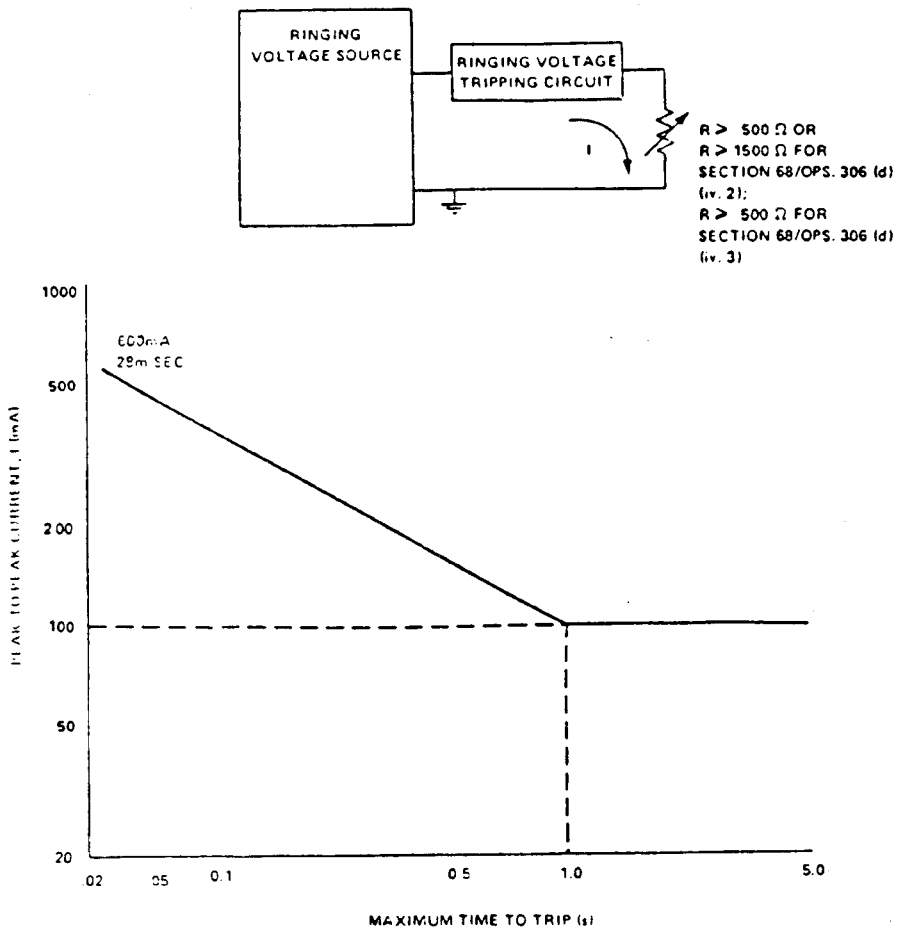

RINGING VOLTAGE TRIP CRITERIA

Fig. 68.306(d)

[45 FR 20854, Mar. 31, 1980, as amended at 45 FR 54342, Aug. 15, 1980; 45 FR 61632, Sept. 17, 1980; 47 FR 39686, Sept. 9, 1982; 51 FR 945, Jan. 9, 1986; 51 FR 16689, May 6, 1986; 60 FR 54814, 54815, Oct. 26, 1995]

§68.308 Signal power limitations.

(a) *General.* Limitation on signal power shall be met at the interface for all 2-wire network ports, tip and ring conductors to PSDS Types II and III, and, where applicable to services, both transmit and receive pairs of all 4-wire network ports. Signal power measurements will be made using terminations as specified in each of the following limitations. The transmit and receive pairs of 4-wire network ports shall be measured with the pair not under test connected to a termination equivalent to that specified for the pair under test. Through-gain limitations apply only in the direction of transmission to the network.

(b) *Voice band metallic signal power*—(1) Limitations at the interface on internal signal sources not intended for network control signaling.

(i) For registered terminal equipment or registered protective circuitry, connected to interfaces associated with services contained in §68.2(a) (1), (2), and (7), other than data equipment or data protective circuitry which is registered in accordance with §68.308(b)(4), the maximum power of other than live voice signals delivered to a loop simulator circuit shall not exceed −9dB with respect to one milliwatt, when averaged over any 3-second interval. No manufacturing tolerance is allowed which would permit this power to be exceeded by any unit of equipment.

(ii) For tie trunk type interfaces, the maximum power of other than live voice signals delivered to a 600 ohm termination shall not exceed the following:

MAXIMUM POWER WITH RESPECT TO ONE MILLIWATT WHEN AVERAGED OVER ANY 3-SECOND INTERVAL

2-wire	4-wire Lossless	4-wire CTS [b]
−15 dB[a]	−15 dB[a]	−19 dB, nom.

NOTES: (a) The maximum signal power may be exceeded by as much as 1.0 dB by a single unit of equipment or circuitry, provided that the power averaged over all units of production, complies with the specified limitations.

(b) The 4-Wire CTS shall meet the requirements for Tie Trunk Transmission Interfaces as defined in §68.3.

(iii) For OPS lines, the maximum power of other than live voice signals delivered to an OPS line simulator circuit shall not exceed −13 dB with respect to one milliwatt, when averaged over any 3-second interval.

(iv) For AIOD channels, the maximum signal power delivered to an AIOD data channel simulator circuit in each of the following operating states shall not exceed −4 dB with respect to one milliwatt averaged over any 3-second time interval:

Simulator circuit[1]	AIOD tip and ring[2]
1	−42.5–56.5
2	0
3	0

[1] Operating state of simulator circuit.

[2] Remote terminal equipment open circuit DC volts to ground on AIOD tip and ring.

The maximum signal power may exceed −4 dB with respect to one milliwatt by as much as 1.0 dB provided that the power averaged over all units of the equipment complies with the specified maximum.

NOTE: The maximum signal power may be exceeded by as much as 1.0 dB by a single unit of equipment or circuitry, provided that the power, averaged overall units of production, complies with the specified limitations.

(v) For registered test equipment or registered test circuitry the maximum signal power delivered to a loop simulator circuit shall not exceed 0 dBm when averaged over any 3-second interval. No manufacturing tolerance is allowed which would permit this power to be exceeded by any unit of equipment.

(vi) For voiceband private lines using ringdown or inband signaling the maximum power of other than live voice signals delivered to a 600 ohm termination shall not exceed −13dBm when averaged over any 3-second interval.

(vii) For voiceband private lines using inband signaling in the band 2600±150 Hz, the maximum power delivered to a 600-ohm termination shall not exceed −8 dBm during the signaling mode. The maximum power delivered to a 600 Ohm termination in the on-hook steady state supervisory condition shall not exceed −20 dBm. The maximum power of other than live voice signals delivered to a 600-ohm termination during the non-signaling mode and for other inband systems shall not exceed −13dBm when averaged over any 3-second interval. The maximum signal power may be exceeded by as much as 1.0 dB by a single unit of equipment or circuitry, provided that the power averaged over all

units of production complies with the specified limitation.

(viii) For PSDS (Types I, II and III) terminal equipment when in the digital mode of transmission, the maximum equivalent power of any encoded analog signal (other than live voice) shall not exceed −12dBm when averaged over any 3-second interval. The equivalent analog power shall be derived by a zero-level decoder at the network interface to PSDS (Type II or III) facilities.

(2) Limitations on internal signal sources primarily intended for network control signaling, contained in voice and data equipment.

(i) For all operating conditions of registered terminal equipment and registered protective circuitry, the maximum power delivered to a loop simulator circuit shall not exceed one milliwatt when averaged over any 3-second interval.

(ii) For tie trunk applications, the maximum power delivered to a 600 ohm termination for registered terminal equipment and registered protective circuitry under all operating conditions shall not exceed the following:

MAXIMUM POWER WITH RESPECT TO ONE MILLIWATT, WHEN AVERAGED OVER ANY 3-SECOND INTERVAL

2-wire	4-wire Lossless	4-wire CTS
−4 dB	−4 dB	−8 dB, nom.

(iii) For PSDS (Types I, II and III) terminal equipment, when in the digital mode of transmission, the maximum equivalent power of any encoded analog signal shall not exceed −3dBm when averaged over any 3-second time interval. The equivalent analog signal shall be derived by a zero-level decoder located at the network interface to PSDS (Type II or III) facilities.

(3) Registered one port and multiport terminal equipment and protective circuitry with provision for through transmission from other terminal equipment, excluding data equipment and data protective circuitry which are registered in accordance with § 68.308(b)(4).

(i) Where through-transmission equipment provides a dc electrical signal to equipment connected therewith (e.g., for powering of electro-acoustic transducers), dc conditions shall be provided which fall within the range of conditions provided by a loop simulator circuit unless the combination of the through-transmission equipment and equipment connected therewith is registered as a combination which conforms to § 68.308(b) (1) and (2).

(ii) Through-transmission equipment to which remotely connected data terminal equipment may be connected shall not be equipped with or connected to either a Universal or Programmed Data Jack used in data configurations. (See §§ 68.308(b)(4) and 68.502(e)).

(4) Limitations on registered data terminal equipment and registered one-port protective circuitry with provision for through-transmission from data equipment. When such equipment or circuitry is used for the transmission of data signals to the telephone network, it shall assure in all operating conditions, other than network control signaling (see § 68.308(b)(2) of this section), that one of the following limitations is met, depending upon the means of connection of the equipment or circuitry to the telephone network. The transmitted signal power, averaged over any 3-second time interval, delivered to a loop simulator circuit, shall not exceed:

(i) A maximum level adjustable to no greater than –4 dB with respect to one milliwatt, for connection to a Universal Data Jack used in the ''fixed loss loop'' configurations of § 68.502(e).

(ii) A maximum level determined by means of connections in the Programmed Data Jack or Universal Data Jack, used in the ''programmed'' configurations of § 68.502(e), which level can be programmed in 1 dB steps from −12 dB to 0 dB with respect to one milliwatt by means of programming connections made within the jack.

(iii) A nonadjustable level no greater than –9 dB with respect to one miliwatt for connection by means other than those which implement the limitations in paragraphs (b)(4)(i) and (ii) of this section. Equipment or circuitry designed in accordance with this –9 dBm limitation shall be treated as non-live voice equipment within these rules.

The maximum signal power specified in (paragraphs (b)(4) (i) and (ii) of this section may be exceeded by as much as

1.0 dB by a single unit of equipment or circuitry, provided that the power averaged over all units of production, complies with the specified limitations. The maximum signal power specified in paragraphs (b)(4)(iii) of this section may not be exceeded by any units of production.

(5) Registered one port and multiport terminal equipment and protective circuitry with provision for through-transmission from ports to other equipment which is separately registered for the public switched network, or ports to other network interfaces.

(i) Registered terminal equipment and registered protectives circuitry shall have no adjustments that will allow net amplification to occur in either direction of transmission in the through-transmission path within the freguency range of 200 to 4000 Hertz that will exceed the following:

MAXIMUM ALLOWABLE NET AMPLIFICATION BETWEEN PORTS (A)(D)(E)(F)

From (F) \ To	Tie Trunk Type Ports (C): 2-Wire	Tie Trunk Type Ports (C): 4-Wire Lossless	Tie Trunk Type Ports (C): 4-Wire CTS	Tie Trunk Type Ports (C): Subrate 1.544 Mbps Satell. 4 W	Tie Trunk Type Ports (C): Subrate 1.544 Mbps Tandem 4 W	OPS Ports (2-Wire) (B)	Public Switched Network Ports (2-Wire)	HCC Digital PBX-CO 4-Wire
Tie Trunk Type Ports (C): 2-W	0dB avg 1.5dB max	0dB avg 1.5dB max	–4dB nom.	0dB avg 1.5dB max	3dB avg 4.5dB max	–2dB avg –0.5dB max	–	–
Tie Trunk Type Ports (C): 4-W Lossless	0dB avg 1.5dB max	0dB avg 1.5dB max	–4dB nom.	0dB avg 1.5dB max	3dB avg 4.5dB max	–2dB avg –0.5dB max	–	–
Tie Trunk Type Ports (C): 4-W CTS	–4dB nom.	–4dB nom.	–8dB nom.	–4dB nom.	–1dB nom.	–6dB nom.	–	–
Tie Trunk Type Ports (C): Subrate 1.544 Mbps Satellite 4 W	0dB avg 1.5dB max	0dB avg 1.5dB max	–4dB nom.	0dB avg 1.5dB max	0dB avg 1.5dB max	0dB avg 1.5dB max	–	–
Tie Trunk Type Ports (C): Subrate 1.544 Mbps Tandem 4 W	–3dB avg –1.5dB max	–3dB avg –1.5dB max	–7dB nom.	0dB avg 1.5dB max	0dB avg 1.5dB max	0dB avg 1.5dB max	–	–
RTE (B)	–2dB avg –0.5dB max	–2dB avg –0.5dB max	–6dB nom.	–3dB avg –1.5dB max	–3dB avg –1.5dB max	0dB avg 1.5dB max	0dB avg 1.5dB max	–3dB avg –1.5dB max
OPS 2-W (B)	–2dB avg –0.5dB max	–2dB avg –0.5dB max	–6dB nom.	0dB avg 1.5dB max	0dB avg 1.5dB max	0dB avg 1.5dB max	0dB avg 1.5dB max	0dB avg 1.5dB max
Public Switch Net 2-W	–	–	–	–	–	0dB avg 1.5dB max	–	–
HCC Digital PBX-CO 4-W	–	–	–	–	–	0dB avg 1.5dB max	–	–

(A) The source impedance for all measurements shall be 600 ohms. All ports shall be terminated in *appropriate* loop or private line channel simulator circuits or 600 ohm terminations. The numerical ''avg.'' and ''max.'' requirements mean that the net gain for each type of connection through such equipment or circuitry shall be designed not to exceed the average gain for such paths in all units; however, the gain for any path of any single unit may exceed the average by as much as the maximum provided that the net gain, averaged over such paths in all units of production, is no greater than the average. The term ''nom.'' allows for variations encountered in conventional terminating set losses as defined in § 68.3.

(B) These ports are for 2-wire on-premises station ports to separately registered terminal equipment.

(C) The 4-Wire CTS shall meet the requirements for Tie Trunk Transmission Interfaces as defined in § 68.3.

(D) These through gain limitations are applicable to multiport systems where channels are not derived by time or frequency compression methods. Terminal equipment employing such compression techniques shall assure that equivalent compensation for through gain parameters is demonstrated in the registration application.

(E) Registered terminal equipment and registered protective circuitry may have net amplification exceeding the limitations of this subsection provided that, for each network interface type to be connected, the absolute signal power levels specified on this section are not exceeded.

(F) The indicated gain is in the direction which results when moving from the horizontal entry toward the vertical entry.

(G) Registered terminal equipment or protective circuitry with the capability for through-transmission from voiceband private line channels or voiceband metallic channels to other telephone network interfaces shall assure that the absolute signal power levels specified in this section, for each telephone network interface type to be connected, are not exceeded.

(H) Registered terminal equipment or protective circuitry with the capability for through transmission from voiceband private line channels or voiceband metallic private line channels to other telephone network interfaces shall assure, for each telephone network interface type to be connected, that signals with energy in the 2450 to 2750 Hertz band are not through transmitted unless there is at least an equal amount of energy in the 800 to 2450 Hertz band within 20 milliseconds of application of signal.

(ii) The insertion loss in through connection paths for any frequency in the 800 to 2450 Hertz band shall not exceed the loss at any frequency in the 2450 to 2750 Hertz band by more than 1 dB (maximum loss in the 800 to 2450 Hertz band minus minimum loss in the 2450 to 2750 Hertz band plus 1 dB.

(6) *For tie trunk type interfaces—Limitation on idle circuit stability parameters.* For idle state operating conditions of registered terminal equipment and registered protective circuitry, the following limitations shall be met:

(i) For the two-wire interface

$$RL \geq \begin{cases} \left(9 - 3\,\dfrac{\log(f/200)}{\log 2.5}\right)\text{dB}; & \text{for } 200\text{ Hz} \leq f \leq 500\text{ Hz} \\ 6\text{ dB} & ;\ \text{for } 500\text{ Hz} \leq f \leq 3200\text{ Hz} \end{cases}$$

(ii) For the four-wire lossless interface

$$tl_f \geq \begin{cases} \left(10-4\,\dfrac{\log(f/200)}{\log 2.5}\right) \text{ dB; for } 200 \text{ Hz} \leq f \leq 500 \text{ Hz} \\ 6 \text{ dB} \qquad\qquad ; \text{ for } 500 \text{ Hz} \leq f \leq 3200 \text{ Hz} \end{cases}$$

$$tl_r > 40 \text{ dB}$$

$$RL_1, RL_o \geq 3\text{dB}$$

(iii) For the four-wire conventional terminating set interface

$$tl_f,\ tl_r \geq \begin{cases} \left(18-4\,\dfrac{\log(f/200)}{\log 2.5}\right) \text{ dB; for } 200 \text{ Hz} \leq f \leq 500 \text{ Hz} \\ 14 \text{ dB} \qquad\qquad ; \text{ for } 500 \text{ Hz} \leq f \leq 3200 \text{ Hz} \end{cases}$$

$$RL_i,\ RL_o \geq 3 \text{ dB}$$

where RL the return loss of 2-wire terminal equipment at the interface with respect to 600 ohms + 2.16 uF (i.e., Z_{ref} = 600 ohms + 2.16 uF).

$$RL \triangleq 20 \log_{10} \left| \frac{Z_{PBX} + Z_{ref}}{Z_{PBX} - Z_{ref}} \right|$$

RL_i the terminal equipment input (receive) port return loss with respect to 600 ohms (i.e., Z_{ref} = 600 ohms).

$$RL_i \triangleq 20 \log_{10} \left| \frac{Z_{PBX\ (input)} + Z_{ref}}{Z_{PBX\ (input)} - Z_{ref}} \right|$$

RL_o the terminal equipment output (transmit) port return loss with respect to 600 ohms (i.e., Z_{ref} = 600 ohms).

$$RL_o \triangleq 20 \log_{10} \left| \frac{Z_{PBX\ (output)} + Z_{ref}}{Z_{PBX\ (output)} - Z_{ref}} \right|$$

tl - the transducer loss between the receive and transmit ports of the 4-wire PBX.

tl_f is the transducer loss in the <u>forward</u> direction from the <u>receive</u> port to the <u>transmit</u> port of the PBX.

$$tl_f \triangleq 20 \log_{10} \left| \frac{I_i}{I_r} \right|$$

where I_i is the current sent into the <u>receive</u> port and I_r is the current received at the <u>transmit</u> port terminated at 600 ohms.

tl_r is the transducer loss in the <u>reverse</u> direction, from the <u>transmit</u> port to the <u>receive</u> port of the PBX.

$$tl_r \triangleq 20 \log_{10} \left| \frac{I_i}{I_r} \right|$$

where I_i is the current sent into the <u>transmit</u> port and I_r is the current received at the <u>receive</u> port terminated at 600 ohms.

Note: The source impedance of I_i is 600 ohms.

(7) *Registered terminal equipment and registered protective circuitry shall provide the following range of dc conditions to off-premises station (OPS) lines.* (i) DC voltages applied to the OPS interface for supervisory purposes and during network control signaling shall meet the limits specified in § 68.306(a)(6)(i).

(ii) DC voltages applied to the OPS interface during the talking state shall meet the following requirements:

(A) The maximum open circuit voltage across the tip (T(OPS)) and ring (R(OPS)) leads for Classes A, B, and C shall not exceed 56.5 volts, and

(B) Except for class A OPS interfaces, the maximum dc current into a short circuit across the tip (T(OPS)) and ring (R(OPS)) leads shall not exceed 140 mA, and

(C) Except for class A OPS interfaces, the dc current into the OPS line simulator circuit must be at least 20 mA for the following conditions (see Fig. 68.3(f)):

R2 + RL

Condition	Class B	Class C
1	600	1300
2	1800	2500

(8) For Message Registration the requirements of § 68.308(b) do not apply.

(9) For connections to 1.544 Mbps digital services, the permissible code words for unequipped Mu-255 encoded subrate channels are limited to those corresponding to signals of either polarity, of magnitude equal to or less than X48, where code word, XN is derived by:

$$XN=(255-N) \text{ base } 2$$

$$-XN=(127-N) \text{ base } 2$$

(c) *Signal power in the 3995–4005 Hz frequency band*—(1) *Power resulting from internal signal sources contained in registered protective circuitry and registered terminal equipment (voice and data), not intended for network control signaling.* For all operating conditions of registered terminal equipment and registered protective circuitry which incorporate signal sources other than sources intended for network control signaling, the maximum power delivered by such sources in the 3995–4005 Hertz band to an appropriate simulator circuit, shall be 18 dB below maximum permitted power specified in paragraph (b) of this section, for the 200–4000 Hertz band.

(2) *Terminal equipment with provision for through-transmission from other equipments.* The loss in any through transmission path of registered terminal equipment and registered protective circuitry at any frequency in the 600 to 4000 Hertz band shall not exceed, by more than 3 dB, the loss at any frequency in the 3995 to 4005 Hertz band, when measured into an appropriate simulator circuit from a source which appears as 600 ohms across tip and ring.

(3) For Message Registration the requirements of § 68.308(c) do not apply.

(d) *Longitudinal voltage at frequencies below 4 kHz.* The weighted root-mean-squared voltage* averaged over 100 milliseconds that is the resultant of all of the component longitudinal voltages in the 100 Hz to 4 kHz band after weighting according to the curve of Figure 68.308(a), shall not exceed the maximum indicated under the conditions stated in paragraph (g). The weighting curve in Figure 68.308(a) has an absolute gain of unity at 4 kHz.

Frequency range	Maximum RMS voltage	Impedance
100 Hz to 4 kHz	– 30 dBV	500 ohms

(e) *Voltage in the 4 kHz to 6 MHz frequency range—general case—2-wire and 4-wire lossless interface—4-wire CTS interface (except LADC).* Except as noted, the root-mean-squared (RMS) voltage as averaged over 100 milliseconds at the telephone connections of registered terminal equipment and registered protective circuitry in all of the possible 8 kHz bands within the indicated frequency range and under the conditions specified in paragraph (g) shall not exceed the maximum indicated below. For (1)(i) and (2)(i) below, ''f'' is the center frequency in kHz of each of the possible 8 kHz bands beginning at 8 kHz.

* Note: Average magnitudes may be used for signals that have peak-to-RMS ratios of 20 dB and less. RMS limitations must be used instead of average values if the peak-to-RMS ratio of the interfering signal exceeds this value.

(1) *Metallic voltage*—(i) *4 kHz to 270 kHz.*

Center frequency (f) of 8 kHz band	Max voltage in all 8 kHz bands	Metallic terminating impedance
8 kHz to 12 kHz.	−(6.4+12.6 logf) dBV	300 ohms
12 kHz to 90 kHz.	(23–40 logf) dBV	135 ohms
90 kHz to 266 kHz.	−55 dBV	135 ohms

(ii) *270 kHz to 6 MHz.* The RMS value of the metallic voltage components in the frequency range of 270 kHz to 6 MHz shall, averaged over 2 microseconds, not exceed −15 dBV. This limitation appli'p with a metallic termination having an impedance of 135 ohms.

(2) *Longitudinal voltage*—(i) *4 kHz to 270 kHz.*

Center frequency (f) of 8 kHz band	Max voltage in all 8 kHz bands	Longitudinal terminating impedance
8 kHz to 12 kHz.	−(18.4+20 logf) dBV	500 ohms
12 kHz to 42 kHz.	(3–40 logf) dBV	90 ohms
42 kHz to 266 kHz.	−62 dBV	90 ohms

(ii) *270 kHz to 6 MHz.* The RMS value of the longitudinal voltage components in the frequency range of 270 kHz to 6 MHz shall, not exceed −30 dBV. This limitation applies with a longitudinal termination having an impedance of 90 ohms.

(f) *LADC interface.* The metallic voltage shall comply with the general requirements in (1) below as well as the additional requirements specified in (2) and (3) as stated. The requirements apply under the conditions specified in paragraph (g). Terminal equipment for which the magnitude of the source and/or terminating impedance exceeds 300 ohms, at any frequency in the range of 100 kHz to 6 MHz, at which the signal (transmitted and/or received) has significant power, shall be deemed not to comply with these requirements. A signal is considered to have ''significant power'' at a given frequency if that frequency is contained in a designated set of frequency bands which collectively have the property that the RMS voltage of the signal components in those bands is at least 90% of the RMS voltage of the total signal. The designated set of frequency bands must be used in testing all frequencies.

(1) *Metallic voltages—frequencies below 4 kHz*—(i) *Weighted RMS Voltage in the 10 Hz to 4 kHz Frequency Band.* The weighted root-mean-square (rms) metallic voltage averaged over 100 milliseconds, frequency components weighted according to the curve in Figure 68.308(a), shall not exceed the maximum indicated below. The weighting curve in Figure 68.308(a) has an absolute gain of unity at 4 kHz.

Frequency range	Maximum voltage
10 Hz to 4 kHz	+3 dBV

(ii) *RMS voltage in 100 Hz bands in the frequency range 0.7 kHz to 4 kHz.* The root-mean-squared (rms) metallic voltage averaged over 100 milliseconds in the 100-Hz bands having center frequencies between 750 Hz and 3950 Hz shall not exceed the maximum indicated below.

Center frequency (f) of 100-Hz bands	Maximum voltage
750 to 3950 Hz	−6 dBV

(2) *Metallic voltages—frequencies above 4 kHz—LADC interface*—(i) *100 Hz Bands over frequency range of 4 kHz to 270 kHz.* The root-mean-square (rms) voltage as averaged over 100 milliseconds in all possible 100 Hz bands between 4 kHz and 270 kHz for the indicated range of center frequencies and under the conditions specified in paragraph (g) shall not exceed the maximum indicated below:

Center frequency (f) of 100 Hz bands	Maximum voltage in all 100 Hz bands
4.05 kHz to 4.60 kHz	0.5 dBV
4.60 kHz to 5.45 kHz	(59.2–90 log f)dBV
5.45 kHz to 59.12 kHz	(7.6–20 log f)dBV
59.12 kHz to 266.00 kHz	(43.1–40 log f)dBV

Where f=center frequency in kHz of each of the possible 100 Hz bands.

(ii) *8 kHz bands over frequency range of 4 kHz to 270 kHz.* The root-mean-square (rms) voltage as average over 100-milliseconds in all of the possible 8 kHz bands between 4 kHz and 270 kHz for the indicated range of center frequencies and under the conditions specified in paragraph (g) shall not exceed the maximum indicated below:

Center frequency of (f) 8 kHz bands	Maximum voltage in all 8 kHz bands
8 kHz to 120 kHz	(17.6–20 log f)dBV
120 kHz to 266 kHz	(59.2–40 log f)dBV

Where f=center frequency in kHz of each of the possible 8 kHz bands.

(iii) *RMS voltage at frequencies above 270 kHz.* The root-mean-square (rms) value of the metallic voltage components in the frequency range of 270 kHz to 6 mHz shall, averaged over 2 microseconds, not exceed −15 dBV. This limitation applies with a metallic termination having an impedance of 135 ohms.

(iv) *Peak voltage.* The total peak voltage for all frequency components in the 4 kHz to 6 MHz shall not exceed 4.0 volts.

(3) *Longitudinal voltage*—(i) *Frequencies below 4 kHz.* With the frequency components weighted in accordance with the curve in Figure 68.308(a), the weighted root-mean-square voltage of all frequency components, in the frequency band from 10 Hz to 4 kHz, averaged over 100 milliseconds, shall not exceed the maximum indicated below under the conditions stated in paragraph (g). The weighting curve in Figure 68.308(a) has an absolute gain of unity at 4 kHz.

Frequency range	Max RMS voltage
10 Hz–4kHz	−37 dBV

(ii) 4 kHz to 270 kHz

Center frequency (f) of 8 kHz band	Max voltage in all 8 kHz bands	Longitudinal terminating impedance
8 kHz to 12 kHz.	−(18.4+20logf) dBV	500 ohms
12 kHz to 42 kHz.	(3–40logf) dBV	90 ohms
42 kHz to 266 kHz.	−62 dBV	90 ohms

Where f=center frequency in kHz of each of the possible 8 kHz bands.

(iii) *270 kHz to 6 MHz.* The root-mean-square (RMS) value of the longitudinal voltage components in the frequency range of 270 kHz to 6 MHz shall, averaged over 2 microseconds, not exceed −30 dBV. This limitation applies with a longitudinal termination having an impedance of 90 ohms.

(g) Requirements in paragraphs (d), (e) and (f) apply under the following conditions:

(1) All registered terminal equipment, except equipment to be used on LADC, and all registered protective circuitry must comply with the limitations when connected to a termination equivalent to the circuit depicted in Figure 68.308(b) and *when placed in all operating states of the equipment except* during network control signaling. For message registration in the ground return mode, a termination equivalent to Figure 68.308(c) is required, and metallic voltage limitations do not apply. LADC registered terminal equipment must comply with the metallic voltage limitations when connected to the circuits of Figure 68.3(k) and must comply with the longitudinal limitations when connected to the circuits of Figure 68.308(b), as indicated.

(2) All registered terminal equipment and registered protective circuitry must comply with the limitations in the offhook state over the range of loop current that would flow with the equipment *connected* to an appropriate loop simulator circuit.

(3) Registered terminal equipment and registered protective circuitry with provision for through-transmission from other equipments shall comply with the limitations with a 1000 Hz tone applied *from a 600-ohm source (or, if appropriate, a source which reflects a 600-ohm impedance across tip and ring) at the maximum level that would be applied* during normal operation. Registered protective circuitry for data shall also comply with the tone level 10 dB higher than that expected during normal operation.

(4) Voice terminal equipment containing electroacoustic transducers for live voice input, including recording devices, shall comply with the limitations with a 1000 Hz acoustic signal applied to the electroacoustic transducers that results in a power delivered into a 600 ohm load impedance of −13 dB with respect to one milliwatt for the 2-wire and 4-wire lossless interfaces and −19 dB with respect to one milliwatt for the 4-wire CTS interface.

(5) Except during the transmission of ringing (§ 68.306(d)) and Dual Tone Multifrequency (DTMF) signals, LADC

registered terminal equipment shall comply with all requirements in all operating states and with loop current which may be drawn for such purposes as loop back signaling. The requirements in § 68.308(f)(1) except in paragraphs (i) and (ii) also apply during the application of ringing. The requirement in § 68.308(d)(2) and the requirements in § 68.308(f)(1) (i) and (ii) apply during ringing for frequencies above 300 Hz and with the maximum voltage limits raised by 10 dB. DTMF signals which are used for the transmission of alphanumeric information and which comply with the requirements in § 68.308(f)(1)((i) and in § 68.308(f)(2) or (3) as applicable, shall be deemed to comply with the requirements in § 68.308(f)(1)(ii) provided that, for automatically originated DTMF signals, the duty cycle is less than 50 percent.

(6) LADC registered terminal equipment shall comply with all applicable requirements, except those specified in § 68.308(f)(1) (i) and (ii), during the transmission of each possible data signal sequence of any length. For compliance with § 68.308(f)(3)(i), the limitation applies to the rms voltage averaged as follows:

(i) For digital signals, baseband or modulated on a carrier, for which there are defined signal element intervals, the rms voltage is averaged over each such interval. Where multiple carriers are involved, the voltage is the power sum of the rms voltages for the signal element intervals for each carrier.

(ii) For baseband analog signals, the rms voltage is averaged over each period (cycle) of the highest frequency of the signal (3 dB point on the spectrum). For analog signals which are modulated on a carrier (whether or not the carrier is suppressed), it is averaged over each period (cycle) of the carrier. Where multiple carriers are involved, the voltage is the power sum of the rms voltage of each carrier.

(iii) For signals other than the types defined in paragraphs (g)(6) (i) and (ii) of this section, the peak amplitude of the signal must not exceed +1 dBV.

(7) Equipment shall comply with the requirements in § 68.308(f)(1) (i) and (ii) during any data sequence which may be transmitted during normal use with a probability greater than 0.001. If the sequences transmitted by an equipment are application dependent, the user instruction material shall include a statement of any limitations assumed in demonstrating compliance of the equipment.

(8) In addition to the conditions specified in paragraph (g)(5) of this section, LADC registered terminal equipment which operates in one or more modes as a receiver shall comply with requirements in § 68.308(f)(3) with a tone at all frequencies in the range of potential received signals and at the maximum power which may be received.

(h) *Interference limitations for transmission of bipolar signals over digital services*—(1) *Limitations on Terminal Equipment Connecting to Subrate Digital Services*—(i) *Pulse repetition rate.* The pulse repetition rate shall be synchronous with 2.4, 4.8, 9.6 or 56.0 kilobits per second.

(ii) *Template for maximum output pulse.* When applied to a 135 ohm resistor, the instantaneous amplitude of the largest isolated output pulse obtainable from the registered terminal equipment shall not exceed by more than 10% the instantaneous voltage defined by a template obtained as follows: The limiting pulse template shall be determined by passing an ideal 50% duty cycle rectangular pulse with the amplitude/pulse rate characteristics defined in Table I through a single real pole low pass filter having a cutoff frequency in Hertz equal to 1.3 times the bit rate. For bit rates of 2.4, 4.8 and 9.6 kbps, the filtered pulses shall also be passed through a filter providing the additional attenuation in Table II.

TABLE I—DRIVING PULSE AMPLITUDE

Pulse rate (R) (kbps)	Amplitude (A) (volts)
2.4	1.66
4.8	1.66
9.6	0.83
56.0	1.66

TABLE II—MINIMUM ADDITIONAL ATTENUATION

Pulse rate (R) (kbps)	Frequency band 24 to 32 kHz (dB)	Frequency band 72 to 80 kHz (dB)
2.4	5	1
4.8	13	9
9.6	17	8

The attenuation indicated may be reduced at any frequency within the band by the weighting curve of Figure 68.308(d). Minimum rejection is never less than 0 dB; i.e., the weight does not justify gain over the system without added attenuation.

(iii) *Average power.* The average output power when a random signal sequence, (0) or (1) equiprobable in each pulse interval, is being produced as measured across a 135 ohm resistance shall not exceed 0 dBm for 9.6 kbps or +6 dBm for 2.4 kbps, 4.8 kbps and 56 kbps.

(iv) *Encoded analog content.* If registered terminal equipment connecting to subrate services contains an analog-to-digital converter, or generates signals directly in digital form which are intended for eventual conversion into voiceband analog signals, the encoded analog content of the digital signal must be limited. The maximum equivalent power of encoded analog signals for other than live voice as derived by a zero level decoder test configuration shall not exceed −12 dBm when averaged over any 3-second time interval. The maximum equivalent power of encoded analog signals as derived by a zero level decoder test configuration for signals intended for network control signaling shall not exceed −3 dBm when averaged over any 3-second interval.

(2) Limitations on Terminal Equipment Connecting to 1.544 Mbps Digital Services and ISDN PRA Services—

(i) *Pulse repetition rate.* The pulse repetition rate shall be within ± 75 pulses per second of 1.544 x 10^6 pulses per second.

(ii) *Output pulse templates.* The registered terminal equipment shall be capable of optionally delivering three sizes of output pulses. The output pulse option shall be selectable at the time of installation.

TABLE III

Pulse Height (volts)	2.4 to 3.6.
Pulse Width (half amplitude) (nsec)	324 +/−45.
Maximum rise or fall time; from 10% to 90% points (nsec).	100.

(A) *Option A output pulse.* When applied to a 100 ohm resistor, the instantaneous amplitude of the largest output pulse obtainable from the registered terminal equipment shall fall within the pulse template defined in Table III.

(B) *Option B output pulse.* When applied to a 100 ohm resistor, the instantaneous amplitude of the output from the registered terminal equipment obtained when Option B is implemented shall fall within the pulse template obtained by passing the bounding pulses permitted by Table III through the following transfer function.

$$\frac{V_{out}}{V_{in}} = \frac{n_2 S^2 + n_1 S + n_o}{d_3 S^3 + d_2 S^2 + d_1 S + d_0}$$

where:
$n_0 = 1.6049 \times 10^6$
$n_1 = 7.9861 \times 10^{-1}$
$n_2 = 9.2404 \times 10^{-8}$
$d_0 = 2.1612 \times 10^6$
$d_1 = 1.7223$
$d_2 = 4.575 \times 10^{-7}$
$d_3 = 3.8307 \times 10^{-14}$
$S = j2\pi f$
f=frequency (Hertz)

(C) *Option C output pulse.* When applied to a 100 ohm resistor, the instantaneous amplitude of the output from the registered terminal equipment obtained when Option C is implemented shall fall within the pulse template obtained by passing the pulses obtained in Option B through the transfer function in Option B a second time.

(iii) *Adjustment of signal voltage.* The signal voltage at the network interface must be limited so that the range of pulse amplitudes received at the first Telephone Company repeater is controlled to ±4dB. This limitation is achieved by implementing the appropriate output pulse option as a function of Telephone Company cable loss as specified at time of installation.

Cable loss at 772 kHz (dB)	Terminal equipment	
	Output pulse	Loss at 772 kHz
15 to 22	Option A	0
7.5 to 15	Option B	7.5
0 to 7.5	Option C	15.0

(iv) *Output power.* The output power in a 3 kHz band about 772 kHz when an all ones signal sequence is being produced as measured across a 100 Ohm terminating resistance shall be within the following limits:

Output pulse option	Power in 3 kHz band about 772 kHz (dBm)
A	12 to 19
B	4.5 to 11.5
C	−3 to + 4

The power in a 3 kHz band about 1.544 Mhz shall be at least 25dB below that in a 3 kHz band about 772 kHz.

(v) *Encoded analog content.* If registered terminal equipment connected to 1.544 Mbps digital service or to ISDN PRA service contains an analog-to-digital converter, or generates signals in digital form which are intended for eventual conversion to voiceband analog signals, the encoded analog content of the subrate channels of the ISDN information bearing channels within the 1.544 Mbps signal must be limited. The maximum equivalent power of encoded analog signals for other than live voice that are not intended for network control signaling as derived by a zero level decoder test configuration shall not exceed –12 dBm when averaged over any 3–second time interval. The maximum equivalent power of encoded analog signals as derived by a zero level decoder test configuration for signals intended for network control signaling shall not exceed –3 dBm when averaged over any 3–second interval.

(3) *Pulse Repetition Rate.* For PSDS (Type II) the pulse repetition rate shall be a maximum of 144,000 pulses per second +/−5 pulses per second; for PSDS (Type III) the pulse repetition rate shall be a maximum of 160,000 pulses per +/−5 pulses per second.

(i) *Template for maximum output pulse.* When applied to a 135 ohm resistor the instantaneous amplitude of the largest isolated output pulse obtainable from the registered terminal equipment shall fall within the template of Table IV(A) for PSDS Type II or Table IV(B) for PSDS Type III. The limiting pulse template shall be defined by passing an ideal 50% duty cycle rectangular pulse within he amplitude/pulse rate characteristics of Table IV(A) or Table IV(B) through a 1-pole low-pass filter with a 3dB frequency of 260 kHz.

(ii) Below is the template for maximum output pulse:

Pulse characteristics	Table IV(A)	Table IV(B)
Pulse Height +/−5%	2.6 volts +/−5%	2.4. volts
Pulse Width—100ns	3472.2 +/−150ns	3125 +/−.
Max Rise or Fall Time—microsecond	100ns	1.2.
(From 10% to 90% points) microsecond		+/− 0.2.

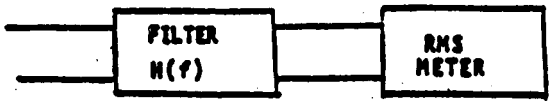

$H(f) = -12 - 20 \log_{10} f)dB$

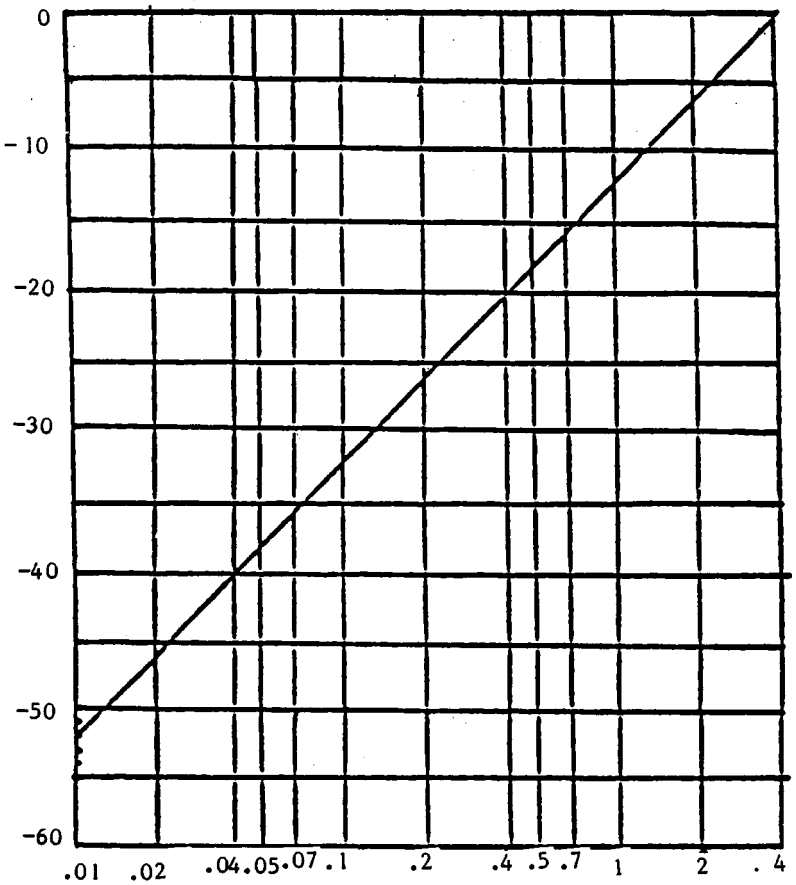

Frequency (f) in kHz

WEIGHTING FUNCTION RESPONSE

Fig. 68.308(a)

RESISTIVE TERMINATIONS
METALLIC RETURN
(MR SIMULATOR MODE 1)

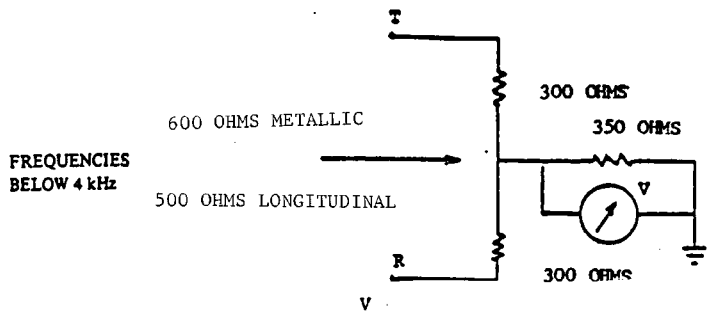

Longitudinal (db) = V(dB) + 3.1 dB

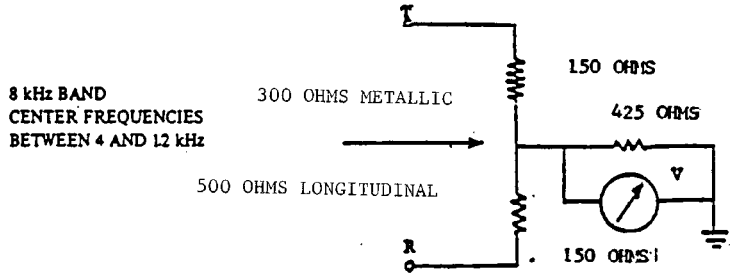

VLongitudinal (dB) = V(db) + 1.4 dB

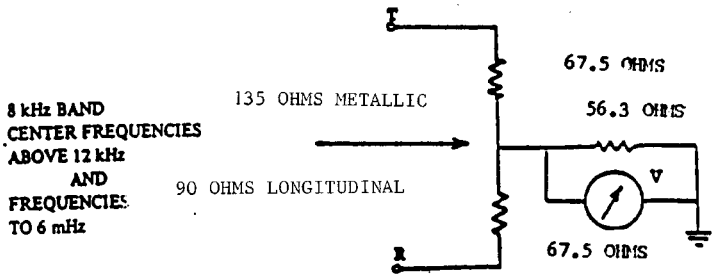

V Longitudinal (dB) = V(dB) + 4 dB

FIGURE 68.308(b)

RESISTIVE TERMINATIONS
GROUND RETURN
(MR SIMULATOR MODE 2)

BELOW 12 KHz

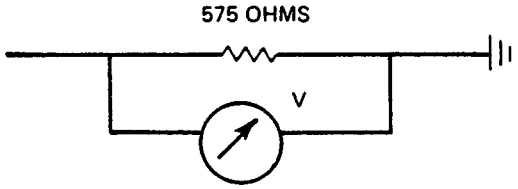

$V_{LONGITUDINAL} = V/2$ (dBV)

ABOVE 12 KHz

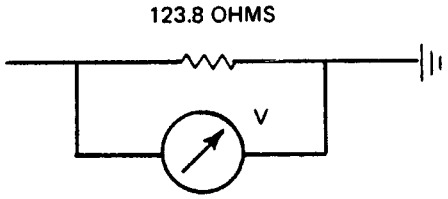

$V_{LONGITUDINAL} = V/2$ (dBV)

FIGURE 68.308(c)

ATTENUATION WEIGHTING CURVE

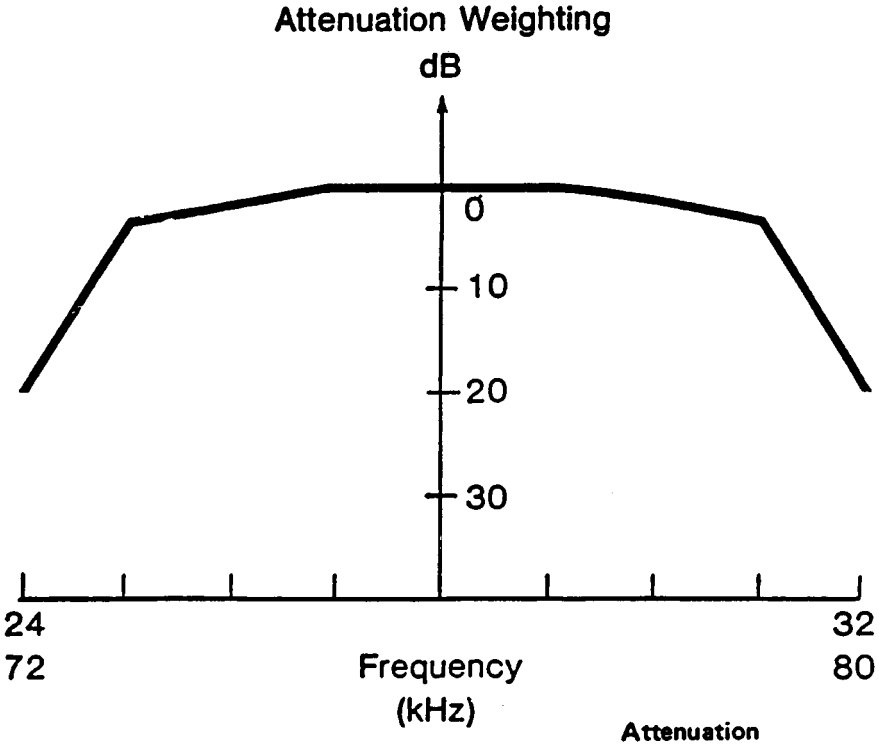

24-32 khz Band	72-80 khz Band	Attenuation Factor
24 khz	72 khz	-18 dB
25 khz	73 khz	- 3 dB
26 khz	74 khz	- 1 dB
27 khz	75 khz	0
28 khz	76 khz	0
29 khz	77 khz	0
30 khz	78 khz	- 1 dB
31 khz	79 khz	- 3 dB
32 khz	80 khz	-18 dB

Figure 68.308(d)

[45 FR 20853, Mar. 31, 1980, as amended at 46 FR 40192, Aug. 7, 1981; 47 FR 10219, Mar. 10, 1982; 47 FR 39687, Sept. 9, 1982; 49 FR 48721, Dec. 14, 1984; 50 FR 48210, Nov. 22, 1985; 51 FR 945, Jan. 9, 1986; 51 FR 16689, May 6, 1986; 61 FR 42392, Aug. 15, 1996]

EFFECTIVE DATE NOTE: At 61 FR 42392, Aug. 15, 1996, in § 68.308, paragraphs (a), (b)(7)(ii)(C), (h)(2) introductory text, (ii) Table III and the first sentence of (v) were revised; (b)(1)(viii), (2)(iii) and (h)(3) were added; (f)(2)(ii) table was amended by removing the words ''20 kHz'' and adding in its place the words ''120kHz'', effective Nov. 13, 1996. For the convenience of the user, the superseded text is set forth as follows:

§ 68.308 Signal power limitations.

(a) *General.* Limits on signal power shall be met at the interface for all 2-wire network ports and, where applicable to offered services, both transmit and receive pairs of all 4-wire network ports. Signal power measurements shall be made using terminations as specified in each of the following limitations. The transmit and receive pairs of 4-wire network ports shall be measured with the pair not under test connected to a termination equivalent to that specified for the pair under test. Through gain limitations apply only in the direction of transmission toward the network.

* * * * *

(b) * * *

(7) * * *

(ii) * * *

(C) Except for class A OPS interfaces, the dc current into the OPS line simulator circuit must be at least 20 mA for the following conditions (see Fig. 68.3(f)):

* * * * *

(h) * * *

(2) Limitations on Terminal Equipment Connecting to 1.544 Mbps Digital Services—

(i) * * *

(ii) * * *

TABLE III

Pulse height (volts)	2.4 to 3.3
Pulse width (half amplitude) (nsec)	324±45
Maximum rise or fall time: from 10% to 90% points (nsec)	100

* * * * *

(v) *Encoded analog content.* If registered terminal equipment connected to 1.544 Mbps digital service contains an analog-to-digital converter, or generates signals directly in digital form which are intended for eventual conversion into voiceband analog signals, the encoded analog content of the subrate channels within the 1.544 Mbps signal must be limited.

* * * * *

§ 68.310 Longitudinal balance limitations.

(a) *Technical description and application.* The metallic-to-longitudinal balance coefficient, $BALANCE_{m-1}$, is expressed as:

$$BALANCE_{m-1}=20\log_{10}\frac{e_M}{e_L}$$

where e_L is the longitudinal voltage produced across a 500-ohm longitudinal termination and e_M is the metallic voltage across the tip-ring or tip 1 and ring 1 interface of the input port when a voltage (at any frequency 200<f<4000 Hertz) is applied from a balanced 600-ohm metallic source. The source voltage should be set such that e_M=0.775 volts rms (0dBm) when a 600 ohm termination is substituted for the terminal equipment. The minimum balance coefficient specified in this section (as appropriate) shall be equalled or exceeded for all 2-wire network ports, OPS line ports and the transmit pair (tip and ring) and receive pair (tip 1 and ring 1) of all 4-wire network ports at all values of dc loop current that the port under test is capable of drawing when attached to the appropriate loop simulator circuit (see § 68.3). An illustrative test circuit that satisfies the above conditions is shown in Figure 68.310(a); other means may be used to determine the balance coefficient specified herein, provided that adequate documentation of the appropriateness, precision, and accuracy of the alternative means is provided by the applicant. The minimum balance requirements specified below shall be equalled or exceeded under all reasonable conditions of the application of earth ground to the equipment or protective circuitry under test:

Paragraph	Equipment state	Minimum balance	Frequency range
(b)	On-hook	60	200–1000
	On-hook	40	1000–4000
	Off-hook	40	200–4000
(c)	On-hook	60	200–1000
	On-hook	40	1000–4000
	Off-hook	40	200–4000
(d)	Off-hook	40	200–4000
(e)	On-hook	60	200–1000
Voice Equipment	On-hook	40	1000–4000
	Off-hook	40	200–4000
(e)	On-hook	60	200–1000
Data Equipment	On-hook	40	1000–4000
	Off-hook	40	200–4000
(f)	Off-hook	40	200–4000
(g)	On-hook	60	200–1000

Paragraph	Equipment state	Minimum balance	Frequency range
	On-hook	40	1000–4000
	Off-hook	40	200–4000
(h)	Off-hook	40	200–1000
(i)	On-hook	60	200–1000
	On-hook	40	1000–4000
	Off-hook	40	200–4000
(j)	Off-hook	40	200–4000

(b) *Registered one-port terminal equipment for 2-wire non-data applications with loop start, ringdown, inband signaling or voiceband metallic channels.* The one-port shall be driven from a 600-ohm metallic source having a 500-ohm longtitudinal impedance.

(c) *Registered one-port terminal equipment for 2-wire data applications with loop start, ringdown, inband signaling or voiceband metallic channels.* The one-port shall be driven from a 600-ohm metallic source having a 500-ohm longitudinal impedance.

(d) *Registered one-port equipment for ground-start and reverse-battery applications.* The one-port shall be driven from a 600-ohm metallic source having a 500-ohm longitudinal impedance.

(e) *Registered protective circuitry for 2-wire applications with loop start, ringdown, inband signaling or voiceband metallic channels.* These criteria shall be met with either terminal of the interface to other equipment connected to earth ground. The interface to other equipment shall be terminated in an impedance which will be reflected to the telephone connection as 600-ohms in the off-hook state of the registered protective circuit, and the interface should not be terminated in the on-hook state. Figure 68.310(e) shows the interface of the protective circuitry being tested and the required arrangement at the interface to other equipment.

(f) *Registered protective circuitry for ground-start and reverse-battery applications.* These criteria shall be met with either terminal of the interface to other equipment connected to earth ground. The interface to other equipment shall be terminated in an impedance which will be reflected to the telephone connection as 600-ohms in the off-hook state of the protective circuit. Figure 68.310(e) shows the interface of the protective circuitry under test and the required arrangement at the interface to the other equipment.

(g) *Registered multi-port equipment for loop-start applications.* These criteria shall be satisfied for all ports when the ports are terminated in their appropriate networks, as will be identified below, and when interface connections other than the ports are terminated in circuits appropriate to that interface. The minimum balance coefficients shall also be satisfied for all values of dc loop current that the registered equipment is capable of drawing through each of its ports when these ports are attached to the loop simulator circuit specified in these rules. The port under test shall be driven from a 600-ohm metallic source having a 500-ohm longitudinal impedance. The termination for all ports other than the particular one whose balance coefficient is being measured shall have a metallic impedance of 600 ohms and a longitudinal impedance of 500 ohms. Figure 68.310(g) shows this termination.

(h) *Registered multi-port equipment for ground start and reverse battery applications.* These criteria shall be satisfied for all ports when all ports not under test are terminated in their appropriate networks as will be identified below, and when interface connections other than the ports are terminated in circuits appropriate to that interface. The minimum balance coefficients shall be satisfied for all values of dc loop current that the registered equipment is capable of drawing through each of its ports when these ports are attached to the loop simulator circuit specified in these Rules. The port under test shall be driven from a 600-ohm metallic source having a 500-ohm longitudinal impedance. The terminations for all ports other than the particular one whose balance coefficient is being measured shall have a metallic impedance of 600 ohms and a longitudinal impedance of 500 ohms. Figure 68.310(g) shows this termination.

(i) *Registered terminal equipment and registered protective circuitry for 4-wire network ports.* The pair under test shall be driven from a 600-ohm metallic source having a 500-ohm longitudinal impedance. The pair not under test

shall be terminated in a metallic impedance of 600-ohms.

(1) *Registered protective circuitry for loop start, ground start, reverse, battery, ringdown, inband signaling or voiceband metallic channel applications.* These criteria shall be met with either terminal of the interface to other equipment connected to earth ground. The interface to other equipment shall be terminated in an impedance that will result in 600-ohms at each of the transmit and receive pairs of the 4-wire telephone connection in the off-hook state of the registered protective circuit, and the interface should not be terminated in the on-hook state. Figure 68.310(j) shows the interface of the protective circuitry being tested and the required arrangement at the interface to other equipment.

(2) *Registered multiport equipment for loop start, ground start, and reverse battery, ringdown, inband signaling, or voiceband metallic channel applications.* These criteria shall be satisfied for all network ports when the ports are terminated as defined below, and when interface connections other than network ports are terminated in circuits appropriate to the interface. The criteria shall also be satisfied for all values of dc loop current that the registered equipment is capable of drawing through each port when the port is connected to the appropriate 4-wire loop simulator circuit, Figure 68.3(c) or 68.3(d). The terminations for both pairs of all network ports not under test shall have a metallic impedance of 600-ohms and a longitudinal impedance of 500-ohms. Figures 68.310(g) shows this termination.

(j) *Registered PBX equipment (or similar systems) with Class B or Class C off-premises interfaces.* These criteria shall be satisfied for all off-premises station interface ports when these ports are terminated in their appropriate networks for their off-hook state, and when all other interface connections are terminated in circuits appropriate to that interface. The minimum balance coefficients shall also be satisfied for all values of dc loop current that the registered PBX is capable of providing through off-premises station ports when these ports are attached to the off-premises line simulator circuit specified in these rules. The port under test shall be driven from a 600-ohm metallic source having a 500-ohm longitudinal impedance.

(k) *Ringing type Z equipment for loop-start applications.* Equipment which has on-hook impedance characteristics which do not conform to the requirements of § 68.312 (e.g., ''Type Z''), need comply with a minimum balance requirement of 40 dB in the frequency range 200 to 400 Hertz, under the applicable subparagraph above. See § 68.312(f) for conditions upon registration of ''Type Z'' equipment.

(l) The maximum balance requirement for registered terminal equipment connected to digital services specified in Figure 68.310(k) shall be equaled or exceeded for the range of frequencies applicable for the equipment under test and under all reasonable conditions of the application of earth ground to the equipment. All such terminal equipment shall have a longitudinal balance in the acceptable region of Figure 68.310(k). The metallic termination used for the longitudinal balance measurements for 2.4, 4.8, 9.6, and 56 Kbps shall be 135 Ohms plus or minus one percent. The metallic termination used for the longitudinal balance measurements (M–L balance) for subrate, ISDN (BRA) and PSDS shall be 135 ohms +/− 1% and for 1.544 Mbps and ISDA (PRA) shall be 100 ohms +/− 1%. The longitudinal termination for these measurements (L–M balance) shall be 90 ohms in all cases.

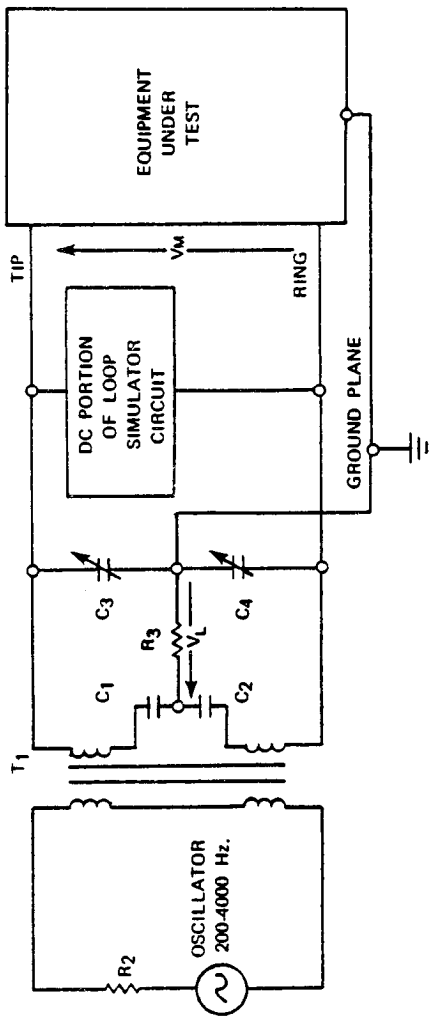

T_1 - W.E.Co. #111C or 119E, or A.D.C. #118F, or equivalent.
C_1, C_2 - 8 microfarad, 400 WVDC, matched to within 0.1%.
C_3, C_4 - 100 to 500 picofarad adjustable trimmer capacitors.
Osc. - Audio oscillator with source resistance, $R_1 \leq 600$ ohms.
R_2 - Selected such that $R_1 + R_2$ = ohms.
R_3 - 500 ohms.

NOTES:

1. V_M should not be measured at the same time as V_L.
2. Use trimmer capacitors C_3 and C_4 to balance the test circuit to 20 dB greater balance than the equipment standard for all frequencies specified, with a 600 ohm resistor substituted for the equipment under test.
3. Exposed conductive surfaces on the exterior of the equipment under test should be connected to the ground plane for this test.

Figure 68.310(a) - Illustrative test circuit complying with Section 68.310(a)

Required termination for connections to non-registered equipment:

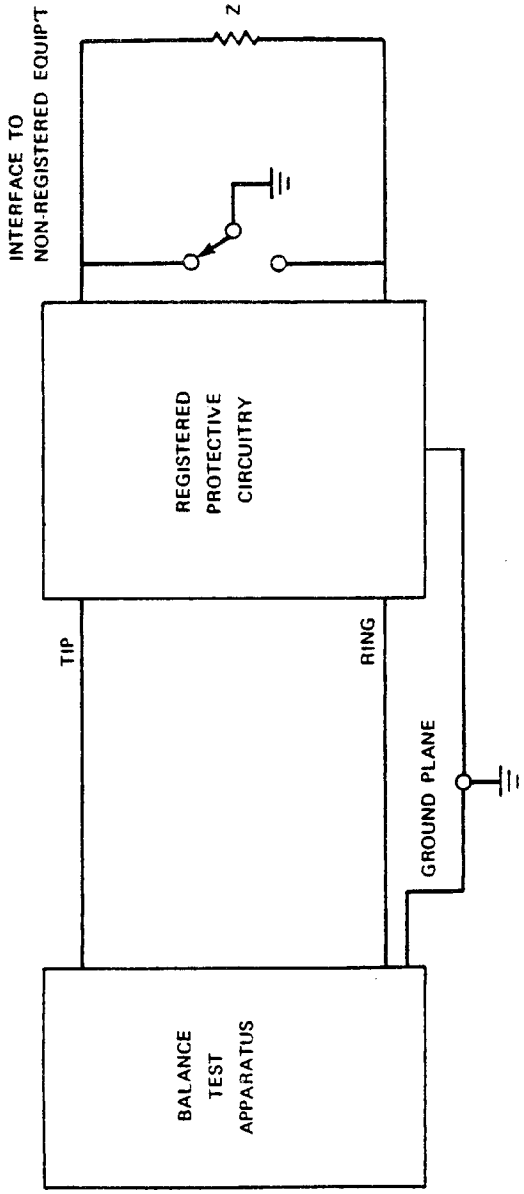

Z - selected so that the relected impedance at tip and ring is 600 ohms.

Figure 68.310(e)

Off-Hook Termination of Multi-port Equipment for Ports not under tests:

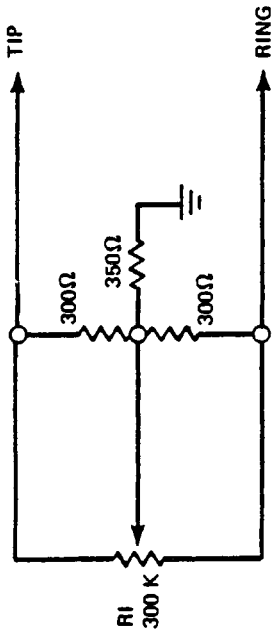

R_1 is used to adjust termination balance. Balance of this termination shall be adjusted to at least 60 dB between 200 and 1000 Hertz, and at least 40 dB between 1000 and 4000 Hertz.

Figure 68.310(g)

REQUIRED TERMINATION FOR CONNECTIONS TO NONREGISTERED EQUIPMENT:

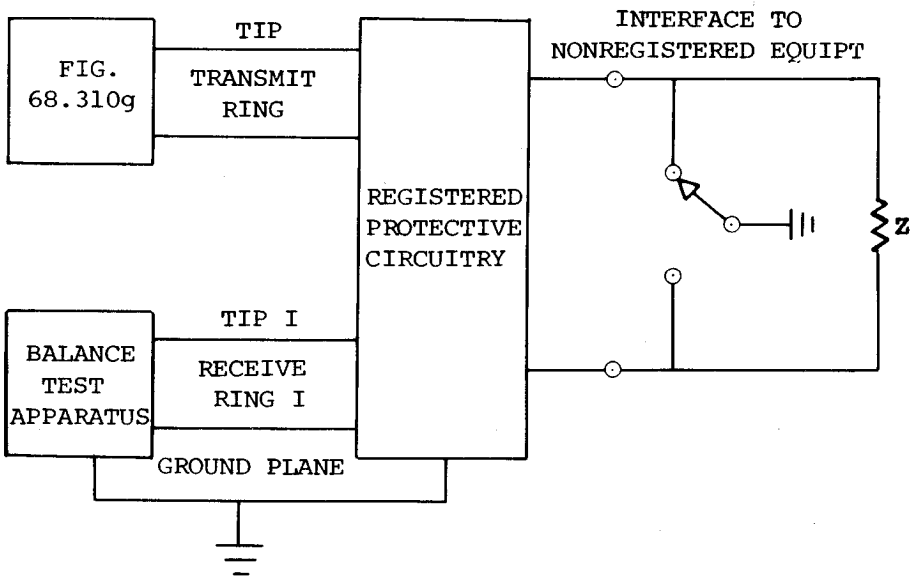

NOTE:

-Z- SELECTED SO THAT THE REFLECTED IMPEDANCE AT TIP I AND RING I IS 600 ohms.

-CONFIGURATION SHOWN IS FOR MEASUREMENT OF RECEIVE PAIR.

Fig. 68.310 (j)
4 Wire

LONGITUDINAL BALANCE REQUIREMENT FOR DIGITAL SERVICES

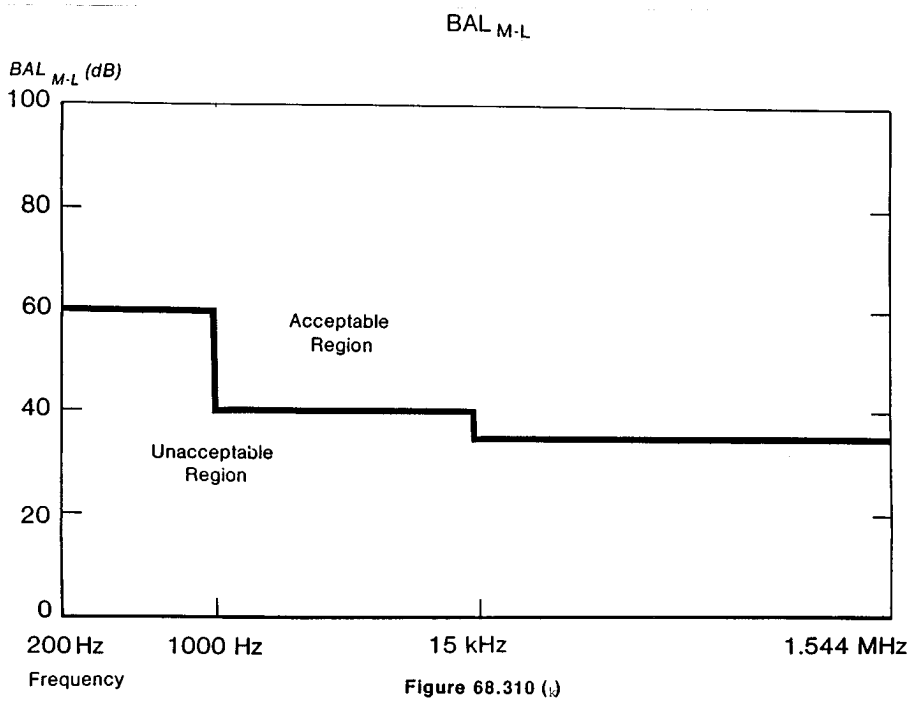

Figure 68.310 (l)

[45 FR 20853, Mar. 31, 1980, as amended at 45 FR 54343, Aug. 15, 1980; 45 FR 61632, Sept. 17, 1980; 47 FR 39687, Sept. 9, 1982; 49 FR 48724, Dec. 14, 1984; 51 FR 950, Jan. 9, 1986; 51 FR 16690, May 6, 1986; 61 FR 42393, Aug. 15, 1996]

EFFECTIVE DATE NOTE: At 61 FR 42393, Aug. 15, 1996, in § 68.310, paragraphs (a) table, (i) introductory text and (l) were revised, effective Nov. 13, 1996. For the convenience of the user, the superseded text is set forth as follows:

§ 68.310 Longitudinal balance limitations.

(a) * * *

Paragraph and equipment state	Minimum balance requirement dB	Frequency range Hz
(b):		
Both on-hook	60	200–1000
and off-hook	40	1000–4000
(c):		
On-hook	60	200–1000
	40	1000–4000
Off-hook	40	200–4000
(d) Off-hook	40	200–4000
(e) Voice equipment:		
Both on-hook	60	200–1000
and off-hook	40	1000–4000
(e) Data Equipment:		
On-hook	60	200–1000
	40	1000–4000
Off-hook	40	200–4000
(f) Off-hook	40	200–4000
(g):		
Both on-hook	60	200–1000
and off-hook	40	1000–4000
(h) Off-hook	40	200–4000
(i):		
Both on-hook	60	200–1000
and off-hook	40	1000–4000
(j) Off-hook	40	200

* * * * *

(i) *Registered terminal equipment and registered protective circuitry for 4-wire network ports.* The pair under test shall be driven from a 600-ohm metallic source having a 500-ohm longitudinal impedance. The pair not

under test shall be terminated in a metallic impedance of 500-ohms. Other conditions are as follows:

* * * * *

(l) The maximum balance requirements for registered terminal equipment connected to digital services specified in Figure 68.310(k) shall be equaled or exceeded for the range of frequencies applicable for the equipment under test and under all reasonable conditions of the application of earth ground to the equipment. All such terminal equipment shall have a longitudinal balance in the acceptable region of Figure 68.310(k). The metallic termination used for the longitudinal balance measurements for 2.4, 4.8, 9.6, and 56 Kbps shall be 135 Ohms plus or minus one percent and for 1.544 Mbps shall be 100 Ohms plus or minus one percent. The longitudinal termination for these measurements shall be 500 Ohms in all cases.

* * * * *

§68.312 On-hook impedance limitations.

(a) *General.* The limitations in this section that involve 2-wire network ports apply to tip and ring of the public switched network. For 4-wire network ports (tip, ring, tip 1, and ring 1) with loop-start or ground-start signaling, the limitations apply when tip and ring conductors are connected together and treated as one of the conductors of a tip and ring pair and the tip 1 and ring 1 conductors are connected together and treated as the other conductor of a tip and ring pair.

(b) Limitations on individual equipment intended for operation on loop-start telephone facilities, including PSDS Type II in the analog mode:

(1) Registered terminal equipment and registered protective circuitry shall conform to the following limitations, for each Ringing Type which is listed as part of its Ringer Equivalence:

(i) The dc resistance between tip and ring conductors, and between each of the tip and ring conductors and earth ground, shall be greater than 5 megohms for all dc voltages up to and including 100 volts.

(ii) The dc resistance between tip and ring conductors, and between each of the tip and ring conductors and earth ground shall be greater than 30 kilohms for all dc voltages between 100 and 200 volts.

(iii) During the application of simulated ringing, as listed in Table I below, the total dc current, shall not exceed 3.0 milliamperes.

(iv) During the application of simulated ringing, as listed in Table I below, the impedance between the tip and ring conductors (defined as the quotient of applied ac voltage divided by resulting true rms current) shall be greater than the value specified in Table I. Except as provided in paragraph (b)(2) of this section, such impedance shall be less than 40 kilohms.

(v) During the application of simulated ringing, as listed in Table I below, the impedance between each of the tip and ring conductors and ground shall be greater than 100 kilohms.

(2) Registered terminal equipment and registered protective circuitry intended for use on facilities which will always have ringing detection circuitry in use at the same time such registered terminal equipment and registered protective circuitry is connected need not comply with the 40 kilohms maximum impedance specification of paragraph (b)(1)(v) of this section.

(c) *Limitations on individual equipment intended for operation on ground-start telephone facilities.* Registered terminal equipment and registered protective circuitry shall conform to the following limitations for each Ringing Type which is listed as part of its Ringer Equivalence Number:

(1) During the application of simulated ringing, as listed in Table I below, the total dc current flowing between tip and ring conductors shall not exceed 3.0 milliamperes.

(2) During the application of simulated ringing, as listed in Table I below, the total impedance of the parallel combination of the ac impedance across tip and ring conductors and the ac impedance from the ring conductor to ground (with ground on the tip conductor) shall be greater than the value specified in Table I. Except as provided in paragraph (b)(2) of this section, such impedance shall be less the 40 kilohms.

(d) *Ringer equivalence definition.* The values of each of the parameters for

which a limitation is imposed in paragraph (b) or (c) of this section, as appropriate, shall be determined for a representative unit under test. Quotients of each such value shall be formed according to the following:

(1) For individual equipment intended for operation on loop-start telephone facilities:

(i) 25 megohms divided by the minimum measured on-hook dc resistance for all dc voltages up to and including 100 volts.

(ii) 150 kilohms divided by the minimum measured on-hook dc resistance for all dc voltages between 100 and 200 volts.

(iii) The maximum total dc current flowing between tip and ring during the application of simulated ringing as listed in Table I below, in milliamperes, divided by 0.6 milliamperes.

(iv) Five times the impedance limitation listed in Table I, below, divided by the minimum measured ac impedance, defined as in paragraph (b)(1)(iv) of this section, during the application of simulated ringing as listed in Table I.

(2) For individual equipment intended for operation on ground-start telephone facilities:

(i) The maximum total dc current flowing between tip and ring conductors during the application of simulated ringing as listed in Table I below, in milliamperes, divided by 0.6 milliamperes.

(ii) Five times the impedance limitation listed in Table I below divided by the minimum measured ac impedance, defined in paragraph (b)(2) of this section, during the application of simulated ringing as listed in Table I.

The largest of the unitless quotients so formed, followed by the Ringing Type letter indicator representing the frequency range for which that number is valid, is the Ringer Equivalence. If Ringer Equivalence is to be stated for more than one Ringing Type, testing shall be performed at each frequency range to which Ringer Equivalence is to be determined in accordance with the above, and the largest resulting Ringer Equivalence number so determined will be associated with each Ringing Type letter designation for which it is valid.

(e) Registered terminal equipment and registered protective circuitry shall have at least one ringer equivalence number shown on the registration label. Where options that will vary the ringer equivalence are involved, either each option that results in a ringer equivalence number greater than 0.1 and its corresponding Ringer Equivalence shall be listed on the registration label, or the largest ringer equivalence number that can result from such options shall be stated on the label. A trained, authorized agent of the Grantee may disconnect ringers, bridge ringers to another line, or execute options affecting ringer equivalence after the telephone company has been notified in accordance with § 68.106.

(f) All registered terminal equipment and registered protective circuitry which can affect on-hook impedance shall be assigned a Ringer Equivalence. The sum of all such ringer equivalences on a given telephone line or loop shall not exceed 5; in some cases, a system which has a total ringer equivalence of 5 or less may not be usable on a given telephone line or loop.

(g) *Ringing type Z equipment.* Equipment which has on-hook impedance characteristics which do not conform to the requirements of this section may be conditionally registered, notwithstanding the requirements of this section, provided that it is labelled with a Ringing Type designation ''Z''. It should be noted that registration of equipment bearing the designation ''Z'' does *not* necessarily confer any right of connection to the telephone network under these rules; any equipment registered with the type Z designation may only be used with the consent of the local telephone company, provided that the local telephone company does not discriminate in its treatment of equipment bearing the type Z designation.

(h) Limitations on PBX equipment with an off-premises interface and direct inward dialing (DID). PBX ringing supplies whose output appears on the off-premises interface leads shall not trip when connected to the following tip-to-ring impedance which terminates the off-premises station loop:

Ringing frequency Hz	ac impedance ohms	
	Class B, or C	Class A
20±3	7000/N	1400
30±3	5000/N	1000

N—Number of ringer equivalences, as specified by the manufacturer, which can be connected to the off-premises station loop.

(i) Limitations on individual equipment intended for operation with message register signaling channels:

(1) Registered terminal equipment and registered protective circuitry shall conform to the following limitations in all operating states.

(2) The dc resistance between each of the tip (*MR*) and ring (*MR*) conductors and ground shall be greater than 30 kilohms for voltages up to and including 200 volts.

(j) Limitations on individual equipment ports with ringdown or inband signaling or voiceband metallic channels for connection to voiceband private line interfaces.

(1) Registered terminal equipment and registered protective circuitry with 2-wire ports for ringdown, inband signaling or voiceband metallic channels shall provide a dc resistance between tip and ring conductors and between each of the tip and ring conductors and earth ground greater than 30 kilohms for all dc voltages up to and including 200 volts.

(2) Registered terminal equipment and registered protective circuitry with 4-wire ports for ringdown, inband signaling or voiceband metallic channels shall provide a dc resistance between each of the tip, ring, tip 1 and ring 1 conductors and earth ground greater than 30 kilohms for all dc voltages up to and including 200 volts.

(k) Registered terminal equipment and registered protective circuitry shall not by design leave the on-hook state by operations performed on tip and ring leads for any other purpose than to request service or answer an incoming call, except that terminal equipment which the user places in the off-hook state for the purpose of manually placing telephone numbers in internal memory for subsequent automatic or repertory dialing shall be registrable. Make-busy indications shall be transmitted by the use of make-busy leads only as defined in §§ 68.3 and 68.200(j).

TABLE I

Ringing type	Range of compatible ringing frequencies Hz	Simulated ringing voltage superimposed 56.5 volts dc	Impedance limitation (ohms)
A	20 ± 3	40 to 130 volts rms	1400
	30 ± 3	40 to 130 volts rms	1000
B	15.3 to 68.0	40 to 150 volts rms	1600
C	15.3 to 17.4	54 to 120 volts rms	1600
D	19.3 to 20.7 [1] (frequency-selective).	54 to 120 volts rms	1600
E	24.3 to 25.7	54 to 120 volts rms	1600
F	29.3 to 30.7 [1] (frequency-selective).	54 to 120 volts rms	1600
G	32.6 to 34.0	54 to 130 volts rms	1600
H	39.2 to 40.9	62 to 130 volts rms	1600
J	41.0 to 43.0	62 to 130 volts rms	1600
K	49.0 to 51.0	62 to 140 volts rms	1600
L	52.9 to 55.1	62 to 140 volts rms	1600
M	58.8 to 61.2	68 to 150 volts rms	1600
N	65.4 to 68.0	68 to 150 volts rms	1600
P	15.3 to 34.0	54 to 130 volts rms	1600
Q	20 ± 3	40 to 130 volts rms	1400

[1] NOTE: Requirements at these frequencies, which are identical to Type A frequencies, are not consistent with the Type A requirements; equipment intended for use both on Type A facilities and facilities using frequency-selective ringing must comply with the requirements on Types A, D and F independently.

[45 FR 20853, Mar. 31, 1980, as amended at 45 FR 61632, Sept. 17, 1980; 45 FR 79486, Dec. 1, 1980; 46 FR 40192, Aug. 7, 1981; 48 FR 34044, July 27, 1983; 51 FR 950, Jan. 9, 1986; 51 FR 28237, Aug. 6, 1986; 61 FR 42394, Aug. 15, 1996; 61 FR 47434, Sept. 9, 1996]

EFFECTIVE DATE NOTE: At 61 FR 42394, Aug. 15, 1996, in § 68.312, paragraphs (b) introductory text, (2) and (h) introductory text were revised, effective Nov. 13, 1996. For the convenience of the user, the superseded text is set forth as follows:

§ 68.312 On-hook impedance limitations.

* * * * *

(b) Limitations on individual equipment intended for operation on loop-start telephone facilities:

* * * * *

(2) Registered terminal equipment and registered protective circuitry intended for use on facilities which always will have additional ringing detection circuitry in use at the same time such registered terminal equipment and registered protective circuitry is connected need not comply with the

40 kilohm maximum impedance specification of paragraph (a)(1)(v) of this section.

* * * * *

(h) Limitations on PBX equipment with an off-premises interface and direct inward dialing (DID).

* * * * *

§ 68.314 Billing protection.

(a) *Call duration requirements on data equipment connected to the public switched network, or to tie trunks, or to private lines that access the public switched network.* Registered data terminal equipment and registered protective circuitry shall comply with the following requirements when answering an incoming call, except in off-hook states in which the signals are transmitted and/or received by electroacoustic transducers only:

NOTE: This paragraph (a) will be applicable to terminal equipment and registered protective circuitry employed with digital services where such digital services are interconnected with the analog telephone network.

(1) *Registered protective circuitry.* Registered protective circuitry connected to associated data equipment shall assure that the following signal power limitations are met for at least 2 seconds after the off-hook condition is presented to the telephone network in response to an incoming call:

(i) Signals that appear at the protective circuitry/telephone network interface for delivery to the telephone network shall be limited to −55 dB with respect to one milliwatt as such signals are delivered into a loop simulator circuit or a 600 ohm termination, as appropriate; and

(ii) Signals that appear at the protective circuitry-associated data equipment interface for delivery to associated data equipment shall be limited as follows: for any received signal power (appearing at the protective circuitry-telephone network interface) up to 0 dB with respect to one milliwatt (at any frequency in the range of 200 to 3200 Hertz), the power of signals delivered to associated data equipment shall be no greater than the signal power that would be delivered as a result of received signal power of −55 dB with respect to one milliwatt.

(2) *Registered terminal equipment.* Registered terminal equipment for data applications shall assure that, when an incoming telephone call is answered, the answering terminal equipment prevents both transmission and reception of data for at least 2 seconds after the answering terminal equipment transfers to the off-hook condition. For the purpose of this requirement, a fixed sequence of signals that is transmitted (and originated within) and/or received by the registered terminal equipment each time it answers an incoming call shall not be considered data, provided that such signals are for one or more of the following purposes:

(i) Disabling echo control devices,

(ii) Adjusting automatic equalizers and gain controls,

(iii) Establishing synchronization, or

(iv) Signaling the presence and if required, the mode of operation, of the data terminal at the remote end of a connection.

(b) *Voice and data equipment on-hook signal requirements for equipment connected to the public switched network, or to tie trunks, or to private lines that access the public switched network.* Registered protective circuitry and registered terminal equipment shall comply with the following:

(1) The power delivered into a 2-wire loop simulator circuit or into the transmit and receive pairs of a 4-wire loop simulator or into a 600 ohm termination (where appropriate) in the on-hook state, by loop-start or ground-start equipment shall not exceed −55dB with respect to one milliwatt within the frequency band from 200 to 4000 Hertz. Registered protective circuitry shall also assure that for any input level up to 10dB above the maximum level that is expected under normal operation, the power to a 2-wire loop simulator circuit or the transmit and receive pairs of a 4-wire loop simulator circuit or into a 600 ohm termination (where appropriate) does not exceed the above limits.

(2) The power delivered into a 2-wire loop simulator circuit or into the transmit and receive pairs of a 4-wire loop simulator circuit, in the on-hook state, by reverse battery equipment

shall not exceed −55dB with respect to one milliwatt, unless the equipment is arranged to inhibit incoming signals.

(c) *Voice and data equipment loop current requirements for equipment connected to the Public Switched network.* The loop current through registered terminal equipment or registered protective circuitry, when connected to a 2-wire or 4-wire loop simulator circuit with the 600 ohm resistor and 500 microfarad capacitor of the 2-wire loop simulator circuit or both pairs of the 4-wire loop simulator circuit disconnected shall, for at least 5 seconds after the equipment goes to the normal off-hook state which would occur in response to ringing (called party condition):

(1) Be at least as great as the current obtained in the same loop simulator circuit with a 200 ohm resistance connected across the tip and ring of the 2-wire loop simulator circuit or connected across the tip/ring and tip 1/ring 1 conductors (tip and ring connected together and tip 1 and ring 1 connected together) of the 4-wire loop simulator circuit in place of the registered terminal equipment or registered protective circuitry; or

(2) Not decrease by more than 25 percent from its maximum value attained during this 5-second interval; unless the equipment is returned to the on-hook state during the above 5 second interval.

(d) *Signaling interference requirements.* (1) Terminal equipment connected to the Public Switched Network or private lines identified in § 68.2(a) (2) and (3). Registered terminal equipment and registered protective circuitry shall not deliver signals into a 2-wire loop simulator circuit or the transmit and receive pairs of a 4-wire loop simulator circuit or a 600-ohm termination (where appropriate) from sources internal to the registered equipment or circuitry, with energy in the 2450 to 2750 Hertz band unless an equal amount of energy is presented in the 800 to 2450 Hertz band.

(2) Registered terminal equipment for connection to subrate or 1.544 Mbps digital services shall not deliver digital signals to the telephone network with encoded analog content energy in the 2450 to 2750 Hertz band unless at least an equal amount of encoded analog energy is present in the 800 to 2450 Hertz band.

(e) *Operating requirements for automatic identified outward dialing*—(1) *General.* Registered terminal equipment that provides Automatic Identified Outward Dialing (AIOD) features shall meet those operating requirements necessary to ensure compatibility with the local telephone company serving central office. A sufficient set of operating characteristics for interfacing with central office AIOD channels is contained in the Electronics Industries Association (EIA) Standard RS–464, Section 4.4.1., dated December 1979.

(2) *Station number assignment.* Station number assignments in registered terminal equipment with AIOD capabilities, including spare numbers for subsequent activities by the customer, must be programed into the equipment by a qualified installer only and such numbers must be restricted to the group of station numbers provided by the telephone company. If the registered terminal equipment is arranged so that the customer can reassign and/or activate new station numbers, means shall be provided so that the customer can verify that the 4-digit number assigned to a station set, incoming tie trunk, or the attendant for AIOD purposes is the same as the number identified by the registered terminal equipment for AIOD when an outgoing call to a central office is originated.

(f) *On-hook signal requirements for registered terminal equipment for connection to subrate or 1.544 Mbps digital services.* Registered terminal equipment and registered protective circuitry shall comply with the following:

(1) The power delivered to the telephone network in the on-hook state as derived by a zero level decoder shall not exceed −55 dBm equivalent power for digital signals within the frequency band from 200 to 4000 Hertz. Registered protective circuitry shall also assure that for any input level up to 10 dB above the maximum level that is expected under normal operation, the power to a zero level decoder does not exceed the above limits.

(2) The power derived by a zero level decoder, in the on-hook state, by reverse battery equipment shall not exceed −55 dB with respect to one milliwatt, unless the equipment is arranged to inhibit incoming signals.

(g) *Off-hook signal requirements for registered terminal equipment connecting to 1.544 Mbps digital services.* Upon entering the normal off-hook state, in response to alerting, for analog subrate channels, registered terminal equipment shall continue to transmit the signaling bit sequence representing the off-hook state for 5 seconds, unless the equipment is returned to the on-hook state during the above 5 second interval.

(h) Operating Requirements for Direct-Inward-Dialing (''DID''). (1) Answer supervision for DID calls to stations connected to the telephone company network through a Private Branch Exchange or similar system (''PBX'') shall be returned to the central office on all calls which are:

(i) Answered by the called DID station,

(ii) Answered by an attendant,

(iii) Routed to an announcement, except for ''number invalid,'' ''not in service,'' or ''not assigned'' recordings,

(iv) Routed to a dialing prompt, or

(v) Routed back to the public switched network by the PBX, including calls routed to ''number invalid,'' ''not in service,'' or ''not assigned'' recordings.

(2) DID calls which do not require the PBX to return answer supervision are those:

(i) Which are not routed back to the public switched network and, in addition, are:

(A) Unanswered, i.e., the called DID station receives a ring or other alerting signal, but does not answer, or the DID station to which the call is forwarded receives a ring or other alerting signal, but does not answer,

(B) Routed to a busy signal,

(C) Routed to a reorder signal, or

(D) Routed to a recorded announcement stating ''number invalid,'' ''not in service,'' or ''not assigned''; and those

(ii) Which are routed back to the public switched network and, in addition, are:

(A) Unanswered, i.e., the called station receives a ring or other alerting signal, but does not answer, or the DID station to which the call is forwarded receives a ring or other alerting signal, but does not answer,

(B) Routed to a busy signal, or

(C) Routed to a reorder signal.

(3) Answer supervision on DID calls shall be provided in accordance with industry engineering standards.

(4) PBX and similar systems manufactured one year from December 31, 1990, shall comply with the paragraph. PBX and similar systems of earlier manufacture shall comply with the paragraph if newly installed or relocated on a customer's premises eighteen months from December 31, 1990, or any time thereafter. Such equipment must be reregistered by the manufacturer or other person responsible for equipment compliance with part 68, if already registered but not compliant with this paragraph (h). Compliance with the paragraph shall require that the equipment be designed, manufactured and installed so that it will return answer supervision in conformity with this rule in a manner which cannot be readily altered by software control or other user controlled media.

(5) As used in this § 68.314(h), *Private Branch Exchange or similar system* (''PBX'') means customer premises equipment, such as private branch exchanges, key equipment, multifunction systems, multiplexers, and any equipment for which adopted industry standard signalling is the standard mode of returning answer supervision.

[45 FR 20853, Mar. 31, 1980, as amended at 47 FR 10219, Mar. 10, 1982; 47 FR 39687, Sept. 9, 1982; 47 FR 42750, Sept. 29, 1982; 49 FR 48725, Dec. 14, 1984; 50 FR 27251, July 2, 1985; 51 FR 950, Jan. 9, 1986; 51 FR 16690, May 6, 1986; 55 FR 46066, Nov. 1, 1990]

§ 68.316 Hearing aid compatibility magnetic field intensity requirements: technical standards.

A telephone handset is hearing aid compatible for the purposes of this section if it complies with the following standard, published by the Telecommunications Industry Association, copyright 1983, and reproduced by permission of the Telecommunications Industry Association:

ELECTRONIC INDUSTRIES ASSOCIATION RECOMMENDED STANDARD RS–504 MAGNETIC FIELD INTENSITY CRITERIA FOR TELEPHONE COMPATIBILITY WITH HEARING AIDS

[Prepared by EIA Engineering Committee TR–41 and the Hearing Industries Association's Standards and Technical Committee]

TABLE OF CONTENTS

List of Illustrations

1 INTRODUCTION
2 SCOPE
3 DEFINITIONS
4 TECHNICAL REQUIREMENTS
4.1 General
4.2 Axial Field Intensity
4.3 Radial Field Intensity
4.4 Induced Voltage Frequency Response
Appendix A—Bibliography

List of Illustrations

Figure Number

1 Reference and Measurement Planes and Axes
2 Measurement Block Diagram
3 Probe Coil Parameters
4A Induced Voltage Frequency Response for receivers with an axial field that exceeds −19 dB
4B Induced Voltage Frequency Response for receivers with an axial field that exceeds −22 dB but is less than −19 dB

Magnetic Field Intensity Criteria for Telephone Compatibility With Hearing Aids

(From EIA Standards Proposal No. 1652, formulated under the cognizance of EIA TR–41 Committee on Voice Telephone Terminals and the Hearing Industries Association's Standards and Technical Committee.)

1 Introduction

Hearing-aid users have used magnetic coupling to enable them to participate in telephone communications since the 1940's. Magnetic pick-ups in hearing-aids have provided for coupling to many, but not all, types of telephone handsets. A major reason for incompatibility has been the lack of handset magnetic field intensity requirements. Typically, whatever field existed had been provided fortuitously rather than by design. More recently, special handset designs, e.g., blue grommet handsets associated with public telephones, have been introduced to provide hearing-aid coupling and trials were conducted to demonstrate the acceptability of such designs. It is anticipated that there will be an increase in the number of new handset designs in the future. A standard definition of the magnetic field intensity emanating from telephone handsets intended to provide hearing-aid coupling is needed so that hearing-aid manufacturers can design their product to use this field, which will be guaranteed in handsets which comply with this standard.

1.1 This standard is one of a series of technical standards on voice telephone terminal equipment prepared by EIA Engineering Committee TR–41. This document, with its companion standards on Private Branch Exchanges (PBX), Key Telephone Systems (KTS), Telephones and Environmental and Safety Considerations (Refs: A1, A2, A3 and A4) fills a recognized need in the telephone industry brought about by the increasing use in the public telephone network of equipment supplied by numerous manufacturers. It will be useful to anyone engaged in the manufacture of telephone terminal equipment and hearing-aids and to those purchasing, operating or using such equipment or devices.

1.2 This standard is intended to be a living document, subject to revision and updating as warranted by advances in network and terminal equipment technology and changes in the FCC Rules and Regulations.

2 Scope

2.1 The purpose of this document is to establish formal criteria defining the magnetic field intensity presented by a telephone to which hearing aids can couple. The requirements are based on present telecommunications plant characteristics at the telephone interface. The telephone will also be subject to the applicable requirements of EIA RS–470, Telephone Instruments with Loop Signaling for Voiceband Applications (Ref: A3) and the environmental requirements specified in EIA Standards Project PN–1361, Environmental and Safety Considerations for Voice Telephone Terminals, when published (Ref: A4).

Telephones which meet these requirements should ensure satisfactory service to users of magnetically coupled hearing-aids in a high percentage of installations, both initially and over some period of time, as the network grows and changes occur in telephone serving equipment. However, due to the wide range of customer apparatus and loop plant and dependent on the environment in which the telephone and hearing aid are used, conformance with this standard does not guarantee acceptable performance or interface compatibility under all possible operating conditions.

2.2 A telephone complies with this standard if it meets the requirements in this standard when manufactured and can be expected to continue to meet these requirements when properly used and maintained. For satisfactory service a telephone needs to be capable, through the proper selection of equipment options, of satisfying the requirements applicable to its marketing area.

2.3 The standard is intended to be in conformance with part 68 of the FCC Rules and Regulations, but it is not limited to the scope of those rules (Ref: A5).

2.4 The signal level and method of measurement in this standard have been chosen to ensure reproducible results and permit comparison of evaluations. The measured magnetic field intensity will be approximately 15 dB above the average level encountered in the field and the measured high-end frequency response will be greater than that encountered in the field.

2.5 The basic accuracy and reproducibility of measurements made in accordance with this standard will depend primarily upon the accuracy of the test equipment used, the care with which the measurements are conducted, and the inherent stability of the devices under test.

3 Definitions

This section contains definitions of terms needed for proper understanding and application of this standard which are not believed to be adequately treated elsewhere. A glossary of telephone terminology, which will be published as a companion volume to the series of technical standards on Telephone Terminals For Voiceband Applications, is recommended as a general reference and for definitions not covered in this section.

3.1 A telephone is a terminal instrument which permits two-way, real-time voice communication with a distant party over a network or customer premises connection. It converts real-time voice and voiceband acoustic signals into electrical signals suitable for transmission over the telephone network and converts received electrical signals into acoustic signals. A telephone which meets the requirements of this standard also generates a magnetic field to which hearing-aids may couple.

3.2 The telephone boundaries are the electrical interface with the network, PBX or KTS and the acoustic, magnetic and mechanical interfaces with the user. The telephone may also have an electrical interface with commercial power.

3.3 A hearing aid is a personal electronic amplifying device, intended to increase the loudness of sound and worn to compensate for impaired hearing. When equipped with an optional inductive pick-up coil (commonly called a telecoil), a hearing aid can be used to amplify magnetic fields such as those from telephone receivers or induction-loop systems.

3.4 The reference plane is the planar area containing points of the receiver-end of the handset which, in normal handset use, rest against the ear (see Fig 1).

3.5 The measurement plane is parallel to, and 10 mm in front of, the reference plane (see Fig 1).

3.6 The reference axis is normal to the reference plane and passes through the center of the receiver cap (or the center of the hole array, for handset types that do not have receiver caps).

3.7 The measurement axis is parallel to the reference axis but may be displaced from that axis, by a maximum of 10 mm (see Fig 1). Within this constraint, the measurement axis may be located where the axial and radial field intensity measurements, are optimum with regard to the requirements. In a handset with a centered receiver and a circularly symmetrical magnetic field, the measurement axis and the reference axis would coincide.

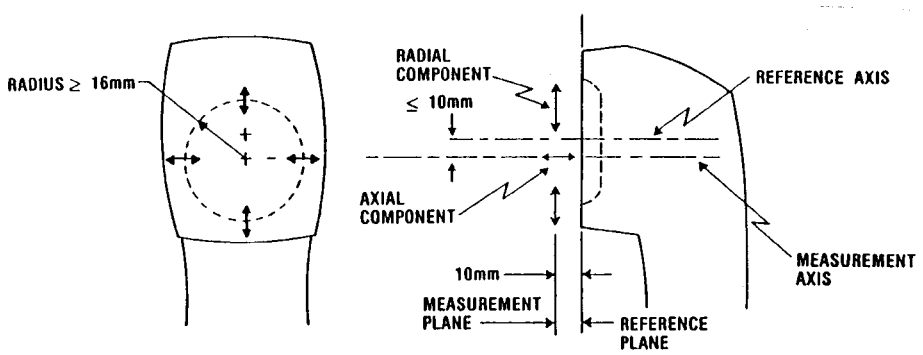

FIG 1 REFERENCE AND MEASUREMENT PLANES AND AXES

4 Technical Requirements

4.1 *General.*

These criteria apply to handsets when tested as a constituent part of a telephone.

4.1.1 Three parameters descriptive of the magnetic field at points in the measurement plane shall be used to ascertain adequacy for magnetic coupling. These three parameters are intensity, direction and frequency response, associated with the field vector.

4.1.2 The procedures for determining the parameter values are defined in the IEEE Standard Method For Measuring The Magnetic Field Intensity Around A Telephone Receiver (Ref: A6), with the exception that this EIA Recommended Standard does not require that the measurements be made using an equivalent loop of 2.75 km of No. 26 AWG cable, but uses a 1250–ohm resistor in series with the battery feed instead (see Fig 2).

4.1.3 When testing other than general purpose analog telephones, e.g., proprietary or digital telephones, an appropriate feed circuit and termination shall be used that produces equivalent test conditions.

4.2 *Axial Field Intensity.*

When measured as specified in 4.1.2, the axial component of the magnetic field directed along the measurement axis and located at the measurement plane, shall be greater than −22 dB relative to 1 A/m, for an input of −10 dBV at 1000 Hz (see Fig 2).

NOTE: If the magnitude of the axial component exceeds −19 dB relative to 1 A/m, some relaxation in the frequency response is permitted (See 4.4.1).

4.3 *Radial Field Intensity.*

When measured as specified in 4.1.2, radial components of the magnetic field as measured at four points 90° apart, and at a distance ≥16 mm from the measurement axis (as selected in 4.2), shall be greater than −27 dB relative to 1 A/m, for an input of −10 dBV at 1000 Hz (see Fig 2).

4.4 *Induced Voltage Frequency Response.*

The frequency response of the voltage induced in the probe coil by the axial component of the magnetic field as measured in 4.2, shall fall within the acceptable region of Fig 4A or Fig 4B (see 4.4.1 and 4.4.2), over the frequency range 300-to-3300 Hz.

4.4.1 For receivers with an axial component which exceeds −19 dB relative to 1 A/m, when measured as specified in 4.1.2, the frequency response shall fall within the acceptable region of Fig 4A.

4.4.2 For receivers with an axial component which is less than −19 dB but greater than −22 dB relative to 1 A/m, when measured as specified in 4.1.2, the frequency response shall fall within the acceptable region of Fig 4B.

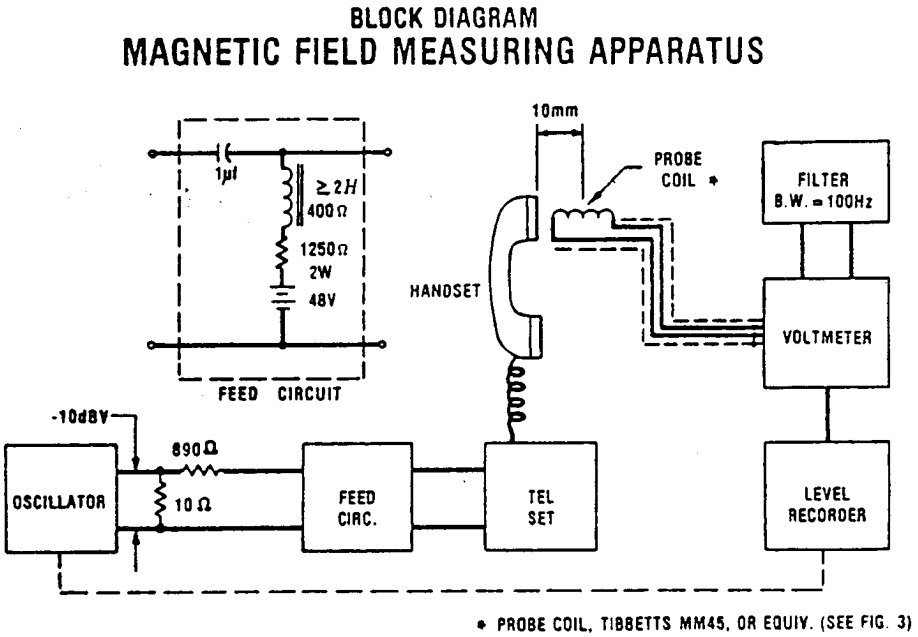

FIG 2 MEASUREMENT BLOCK DIAGRAM

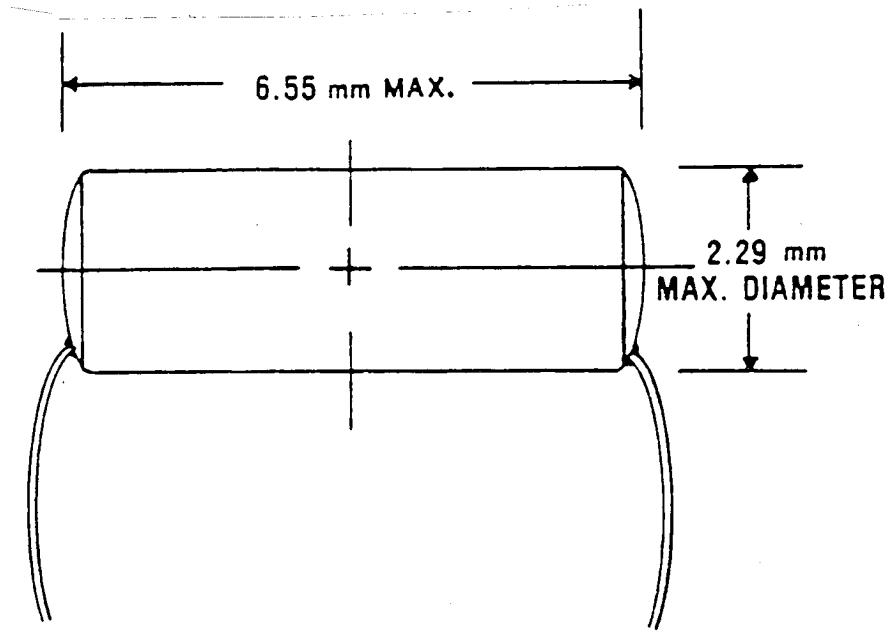

TYPICAL PARAMETERS OF PROBE COIL

DC RESISTANCE: 900 Ω
INDUCTANCE: 140 mH
SENSITIVITY: -60.5 dBV/(A/m)

FIG 3 PROBE COIL PARAMETERS

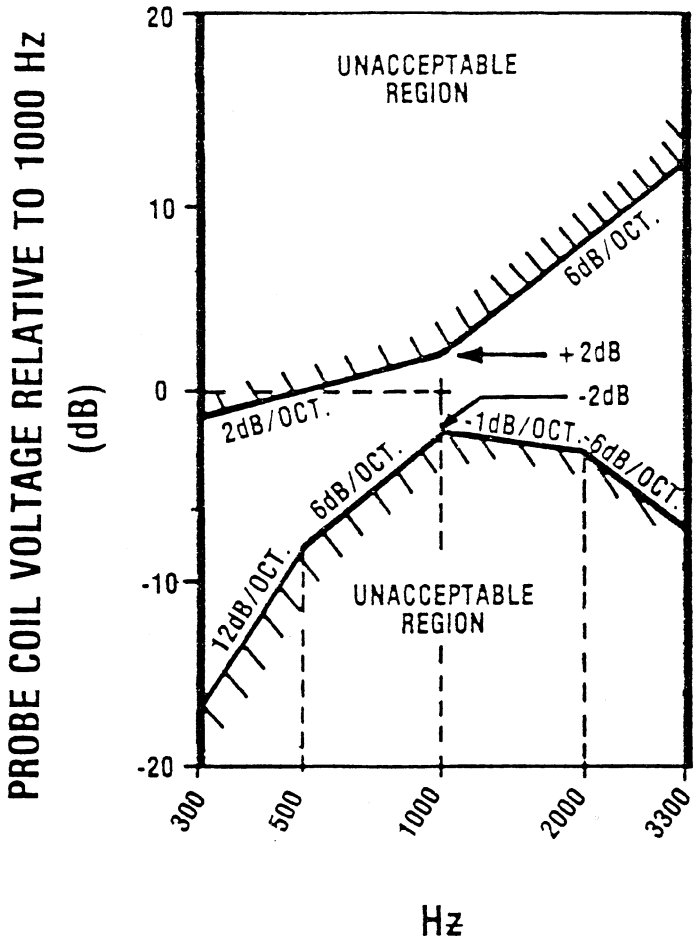

FIG 4A INDUCED VOLTAGE FREQUENCY RESPONSE
FOR RECEIVERS WITH AN AXIAL FIELD THAT EXCEEDS -19 dB

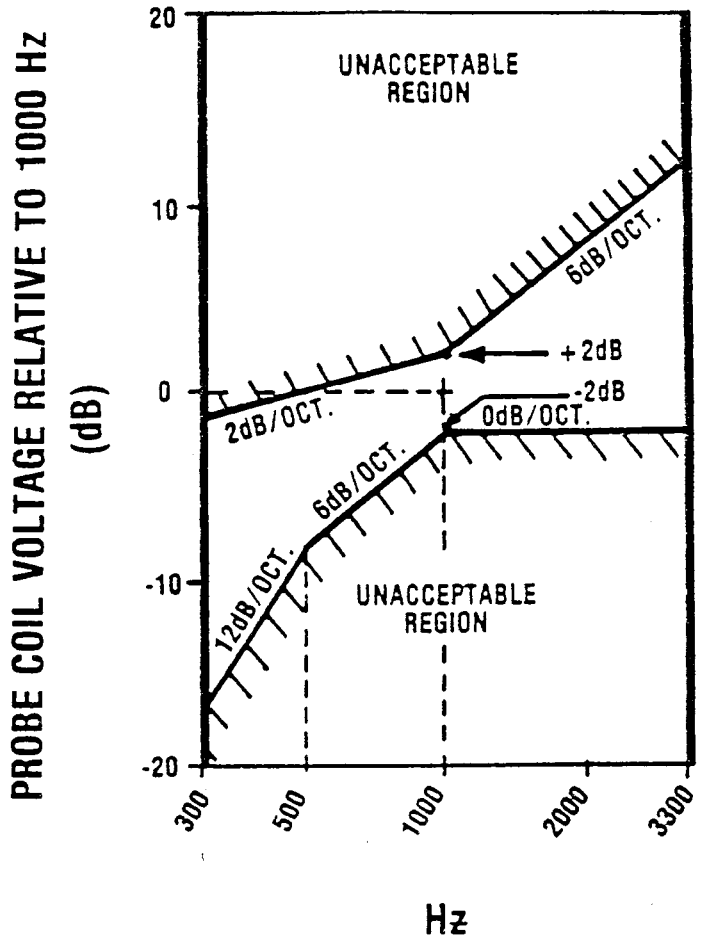

FIG 4B INDUCED VOLTAGE FREQUENCY RESPONSE
FOR RECEIVERS WITH AN AXIAL FIELD THAT EXCEEDS -22 dB

APPENDIX A—BIBLIOGRAPHY

(A1) EIA Standard RS–464, Private Branch Exchange (PBX) Switching Equipment for Voiceband Applications.

(A2) EIA Standard RS–478, Multi-Line Key Telephone Systems (KTS) for Voiceband Applications.

(A3) EIA Standard RS–470, Telephone Instruments with Loop Signaling for Voiceband Applications.

(A4) EIA Project Number PN–1361, Environmental and Safety Considerations for Voice Telephone Terminals.

(A5) Federal Communications Commission Rules and Regulations, part 68, Connection of Terminal Equipment to the Telephone Network.

(A6) IEEE Standard, Method for Measuring the Magnetic Field arould a Telephone Receiver. (to be published)

[49 FR 1363, Jan. 11, 1984, as amended at 61 FR 42187, Aug. 14, 1996]

EFFECTIVE DATE NOTE: At 61 FR 42187, Aug. 14, 1996, in § 68.316, the section heading and introductory paragraph was revised, effective Oct. 23, 1996. For the convenience of the user, the superseded text is set forth as follows:

§ 68.316 Hearing aid compatibility: technical standards.

A telephone handset is hearing aid-compatible if it complies with the following standard, published by Electronic Industries Association, copyright 1983, and reproduced by permission of Electronic Industries Association:

* * * * *

§ 68.317 Hearing aid compatibility volume control: technical standards.

(a) An analog telephone complies with the Commission's volume control requirements if the telephone is equipped with a receive volume control that provides, through the receiver in the handset or headset of the telephone, 12 dB of gain minimum and up to 18 dB of gain maximum, when measured in terms of Receive Objective Loudness Rating (ROLR), as defined in paragraph 4.1.2 of ANSI/EIA–470–A–1987 (Telephone Instruments With Loop Signaling) . The 12 dB of gain minimum must be achieved without significant clipping of the test signal. The telephone also shall comply with the upper and lower limits for ROLR given in Table 4.4 of ANSI/EIA–470–A–1987 when the receive volume control is set to its normal unamplified level.

NOTE TO PARAGRAPH (a): Paragraph 4.1.2 of ANSI/EIA–470–A–1987 identifies several characteristics related to the receive response of a telephone. It is only the normal unamplified ROLR level and the change in ROLR as a function of the volume control setting that are relevant to the specification of volume control as required by this section.

(b) The ROLR of an analog telephone shall be determined over the frequency range from 300 to 3300 HZ for short, average, and long loop conditions represented by 0, 2.7, and 4.6 km of 26 AWG nonloaded cable, respectively. The specified length of cable will be simulated by a complex impedance. (See Figure A.) The input level to the cable simulator shall be −10 dB with respect to 1 V open circuit from a 900 ohm source.

(c) A digital telephone complies with the Commission's volume control requirements if the telephone is equipped with a receive volume control that provides, through the receiver of the handset or headset of the telephone, 12 dB of gain minimum and up to 18 dB of gain maximum, when measured in terms of Receive Objective Loudness Rating (ROLR), as defined in paragraph 4.3.2 of ANSI/EIA/TIA–579–1991 (Acoustic-To-Digital and Digital-To-Acoustic Transmission Requirements for ISDN Terminals). The 12 dB of gain minimum must be achieved without significant clipping of the test signal. The telephone also shall comply with the limits on the range for ROLR given in paragraph 4.3.2.2 of ANSI/EIA/TIA–579–1991 when the receive volume control is set to its normal unamplified level.

(d) The ROLR of a digital telephone shall be determined over the frequency range from 300 to 3300 Hz using the method described in paragraph 4.3.2.1 of ANSI/EIA/TIA–579–1991. No variation in loop conditions is required for this measurement since the receive level of a digital telephone is independent of loop length.

(e) The ROLR for either an analog or digital telephone shall first be determined with the receive volume control at its normal unamplified level. The minimum volume control setting shall be used for this measurement unless the manufacturer identifies a different setting for the nominal volume level. The ROLR shall then be determined

with the receive volume control at its maximum volume setting. Since ROLR is a loudness rating value expressed in dB of loss, more positive values of ROLR represent lower receive levels. Therefore, the ROLR value determined for the maximum volume control setting should be subtracted from that determined for the nominal volume control setting to determine compliance with the gain requirement.

(f) The 18 dB of receive gain may be exceeded provided that the amplified receive capability automatically resets to nominal gain when the telephone is caused to pass through a proper on-hook transition in order to minimize the likelihood of damage to individuals with normal hearing.

(g) These incorporations by reference of paragraph 4.1.2 (including Table 4.4) of American National Standards Institute (ANSI) Standard ANSI/EIA–470–A–1987 and paragraph 4.3.2 of ANSI/EIA/TIA–579–1991 were approved by the Director of the Federal Register in accordance with 5 U.S.C. 552(a) and 1 CFR Part 51. Copies of these publications may be purchased from the American National Standards Institute (ANSI), Sales Department, 11 West 42nd Street, 13th Floor, New York, NY 10036, (212) 642–4900. Copies also may be inspected during normal business hours at the following locations: Federal Communications Commission, 2000 M Street, NW., Public Reference Room, Room 220, Washington, DC 20554; and Office of the Federal Register, 800 N. Capitol Street, NW., suite 700, Washington, DC.

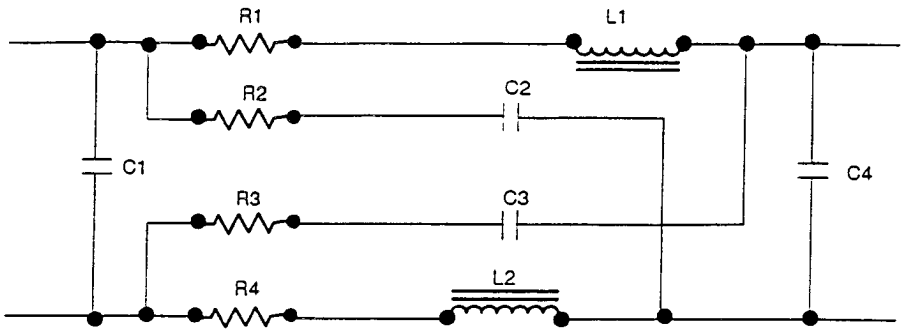

Component	0.914 km (3 kft)	1.83 km (6 kft)
R_1, R_4	124 Ω	249 Ω
R_2, R_3	174 Ω	312 Ω
C_1, C_4	0.0113 μF	0.0226 μF
C_2, C_3	0.0122 μF	0.0255 μF
L_1, L_2	0.336 mH	0.983 mH

Notes:
(1) *All values are ±1%.*
(2) 2.7 km *(9 kft) and* 4.6 km *(15 kft) can be made up of cascaded sections of the above.*

Loop Simulator for 26 AWG Cable

[61 FR 42187, Aug. 14, 1996]

EFFECTIVE DATE NOTE: At 61 FR 42187, Aug. 14, 1996, § 68.317 was added, effective Oct. 23, 1996.

§ 68.318 Additional limitations.

(a) *General.* Registered terminal equipment for connection to those services discussed below must incorporate the specified features.

(b) *Registered terminal equipment connecting to 1.544 Mbps digital service.* (1) Until December 18, 1989, terminal equipment connecting to 1.544 Mbps service shall contain circuitry that assures continuity of output signal. This equipment shall assure that either the outgoing signal meets the minimum pulse density requirement below or one of the specified keep alive signals is transmitted. Power to operate this equipment may come from the line or premises power. Line powered functioning shall be achieved as follows: A direct current connection shall be provided between the simplexes of the transmit and receive pairs. The line power to operate the equipment which assures continuity of the output signal shall be derived from the direct current connection between the simplexes of the transmit and receive pairs. For circuits placed in service prior to February 18, 1988, the telephone company will drive 60 mA through this connection from a constant current source. With 60 mA between the transmit and receive pairs, the voltage drop between the transmit and receive pairs shall

not exceed 67 volts. The minimum acceptable average pulse density is 0.125. The maximum acceptable length of a continuous sequence of ''zeros'' is 80 pulse positions. The keep alive signal inserted when the pulse density drops too low shall be one of the following:

(i) *Type 1 Keep Alive Signal.* This signal is a consecutive sequence of all ''ones''.

(ii) *Type 2 Keep Alive Signal.* This signal is a sequence of 193-bit frames consisting of a framing bit plus 192-bit sequence of consecutive ''ones''. The framing bit executes the following repetitive pattern every 12 frames:

1 0 0 0 1 1 0 1 1 1 0 0

(iii) *Type 3 Keep Alive Signal.* This signal sequence is the regenerated received signal connected to the transmit port through a loopback circuit.

(2) For circuits placed in service on or after February 18, 1988, and for all circuits as of December 18, 1989, whenever such circuits were placed in service, the telephone company is not required to provide line power to operate continuity of output functions in terminal equipment connecting to 1.544 Mbps service. As of December 18, 1989, such terminal equipment is not required to contain continuity of output capability, provided, however, that telephone companies by tariff may require that such equipment contain the continuity of output capability described in this paragraph up to December 18, 1992. Applications for registration of terminal equipment for connection to 1.544 Mbps service which does not contain continuity of output capability shall be accepted as of December 18, 1988, but eligibility for connection to 1.544 Mbps service shall be governed by this paragraph.

(c) *Registered terminal equipment connecting to the public switched network*—(1) *Limitation on automatic dialing.* Automatic dialing to a particular number must cease after 15 successive attempts. This rule does not apply to manually activated dialers which dial a number just once following each activation.

(2) *Line seizure by automatic telephone dialing systems.* Automatic telephone dialing systems which deliver a recorded message to the called party must release the called party's telephone line within 5 seconds of the time notification is transmitted to the system that the called party has hung up, to allow the called party's line to be used to make or receive other calls.

(3) *Telephone facsimile machines; identification of the sender of the message.* It shall be unlawful for any person within the United States to use a computer or other electronic device to send any message via a telephone facsimile unless such message clearly contains, in a margin at the top or bottom of each transmitted page or on the first page of the transmission, the date and time it is sent and an identification of the business, other entity, or individual sending the message and the telephone number of the sending machine or of such business, other entity, or individual. The telephone number provided may not be a 900 number or any other number for which charges exceed local or long distance transmission charges. Telephone facsimile machines manufactured on and after December 20, 1992, must clearly mark such identifying information on each transmitted message. Facsimile modem boards manufactured on and after December 13, 1995, must comply with the requirements of this section.

(d) *Requirement that registered equipment allow access to common carriers.* Any equipment or software manufactured or imported on or after April 17, 1992, and installed by any aggregator shall be technologically capable of providing consumers with access to interstate providers of operator services through the use of equal access codes. The terms used in this paragraph shall have the meanings defined in §64.708 of this chapter (47 CFR 64.708).

[49 FR 48726, Dec. 14, 1984, as amended at 51 FR 951, Jan. 9, 1986; 52 FR 43077, Nov. 9, 1987; 52 FR 49413, Dec. 31, 1987; 53 FR 1103, Jan. 15, 1988; 56 FR 18524, Apr. 23, 1991; 56 FR 56166, Nov. 1, 1991; 57 FR 48336, Oct. 23, 1992; 60 FR 42069, Aug. 15, 1995]

Subpart E—Complaint Procedures

§68.400 Content.

A complaint shall be in writing and shall contain:

(a) The name and address of the complainant,

(b) The name (and address, if known) of the defendant against whom the complaint is made,

(c) A complete statement of the facts, including supporting data, where available, showing that such defendant did or omitted to do anything in contravention of part 68 of the Commission's Rules, and

(d) The relief sought.

§ 68.402 Amended complaints.

An amended complaint setting forth transactions, occurrences or events which have happened since the filing of the original complaint and which relate to the original cause of action may be filed with the Commission.

§ 68.404 Number of copies.

An original and two copies of all complaints and amended complaints shall be filed. An original and one copy of all other pleadings shall be filed.

§ 68.406 Service.

(a) The Commission will serve a copy of any complaint or amended complaint filed with it, together with a notice of the filing of the complaint. Such notice shall call upon the defendant to satisfy or answer the complaint in writing within the time specified in said notice of complaint.

(b) All subsequent pleadings and briefs shall be served by the filing party on all other parties to the proceeding in accordance with the requirements of §1.47. Proof of such service shall also be made in accordance with the requirements of said section.

§ 68.408 Answers to complaints and amended complaints.

Any party upon whom a copy of a complaint or amended complaint is served under this subpart shall serve an answer within the time specified by the Commission in its notice of complaint. The answer shall advise the parties and the Commission fully and completely of the nature of the defense, and shall respond specifically to all material allegations of the complaint. In cases involving allegations of harm, the answer shall indicate what action has been taken or is proposed to be taken to stop the occurrence of such harm, both in terms of future production and with reference to articles in the possession of distributors, sellers, and users. Collateral or immaterial issues shall be avoided in answers and every effort should be made to narrow the issues. Matters alleged as affirmative defenses shall be separately stated and numbered. Any defendant failing to file and serve an answer within the time and in the manner prescribed may be deemed in default.

§ 68.410 Replies to answers or amended answers.

Within 10 days after service of an answer or an amended answer, a complainant may serve a reply which shall be responsive to matters contained in such answer or amended answer and shall not contain new matters. Failure to reply will not be deemed an admission of any allegation contained in such answer or amended answer.

§ 68.412 Defective pleadings.

Any pleading filed in a complaint proceeding not in substantial conformity with the requirements of the applicable rules in this part may be dismissed.

§ 68.414 Hearing aid-compatibility: enforcement.

Enforcement of §§68.4 and 68.112 is hereby delegated to those states which adopt those sections and provide for their enforcement. The procedures followed by a state to enforce those sections shall provide a 30-day period after a complaint is filed, during which time state personnel shall attempt to resolve a dispute on an informal basis. If a state has not adopted or incorporated §§68.4 and 68.112, or failed to act within 6 months from the filing of a complaint with the state public utility commission, the Commission will accept such compliants. A written notification to the complainant that the state believes action is unwarranted is not a failure to act.

[49 FR 1368, Jan. 11, 1984]

Subpart F—Connectors

SOURCE: 41 FR 28699, July 12, 1976, unless otherwise noted.

§68.500 Specifications.

General. The US customary units are shown in parentheses throughout this subpart F. US customary units were the original dimensional units used in designing the plugs and jacks shown in the following pages. The dimensions shown without parenthesis are in SI units. The SI dimensional units are derived from the US customary units by multiplying ''inches'' by ''25.4'' to derive the exact conversion in millimeters with no rounding-off of the resulting decimal value. The number of decimal places to which the conversion is taken by adding a particular number of zeroes to the right end of the resulting SI value, where required, is governed by the concept that when the calculated SI dimensional unit is divided by ''25.4,'' the resulting ''inches'' calculation will be exactly that shown in the parenthesis (the original design dimension). The conversion to SI force units, newtons, is rounded off to a number of decimal places that will result in the calculated SI force value being within less than one percent of the original US customary force unit value located adjacent in parenthesis (the original design value). The rationale for this is that this will bring the force conversions to within the degree of accuracy of the force-measuring device and avoid the carrying of an unrealistic number of decimal places which would otherwise result from an exact conversion. The plugs and jacks described in this section represent the standard connections to be used for connections to the telephone network. The plug and jack designs shown are representative of generic types, and should not be interpreted as the only designs that may be used. Design innovation and improvement is expected; but for interchangeability to be maintained, alternative designs (the ''or equivalent'' permitted in §68.104) must be compatible with the plugs and jacks shown. The interface dimensions between mating plugs and jacks must be maintained. Hardware used to mount, protect, and enclose standard jacks is not described. The only requirement on connecting blocks, housings, dust covers, outdoor boxes, and the like that contain standard network jacks is that they accept standard plugs with cordage. For special purpose applications, plugs may be made longer than shown or adapted for direct use on equipment or apparatus without cordage. The sliding modular plug used on the back of many modular wall telephone sets is an example of such a special purpose application. It is the responsibility of the designers and manufacturers of communication equipment who use such plugs to assure that they are compatible with the hardware used to mount standard jacks with which they plan to interface.

(a) *Minature 6-position plug:*

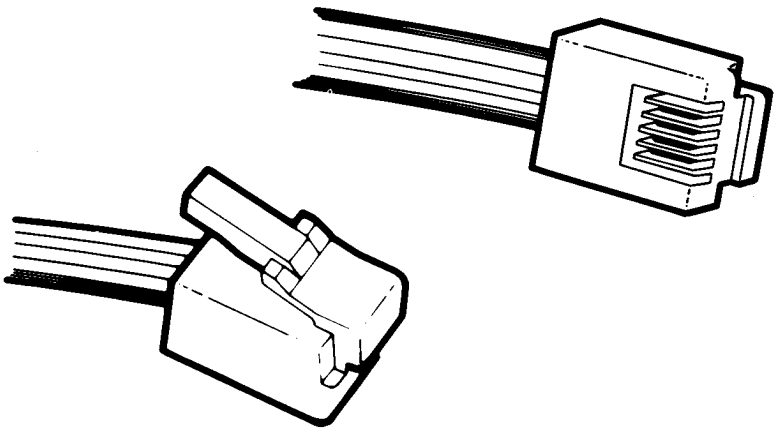

(Note: This plug is depicted equipped with 4 contacts; it may be fabricated with its full 6 contact capability.)

Figure 68.500(a)(1)(i)–View

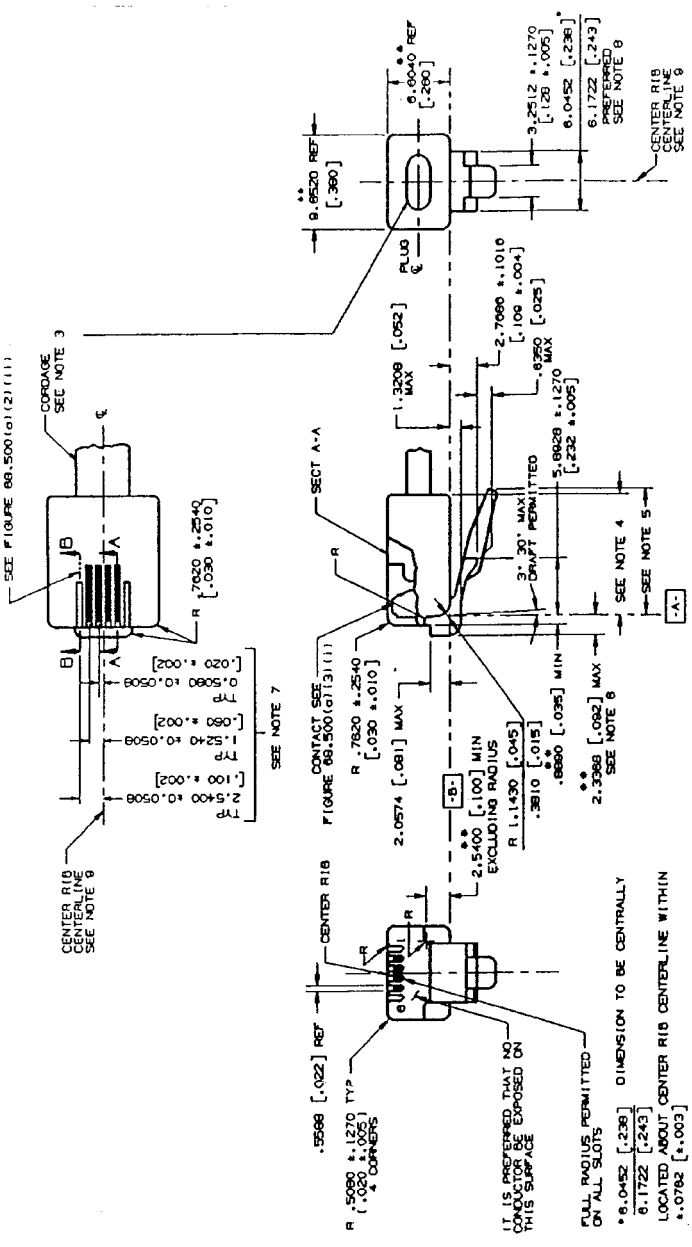

FIGURE 68.500(a)(2)(i)(i) - 6 POSITION PLUG MECHANICAL SPECIFICATION

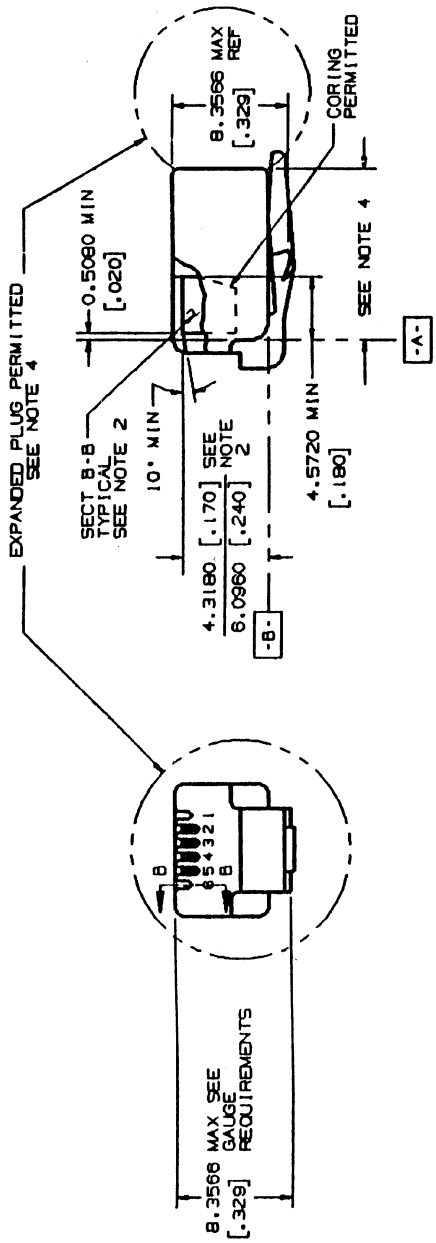

NOTE: ALL NOTES FOLLOW THIS FIGURE.

FIGURE 68.500(a)(2)(ii) - 6 POSITION PLUG
MECHANICAL SPECIFICATION (CONTINUED)

NOTES: (Notes apply to Figures 68.500(a)(2)(i) and 68.500(a)(2)(ii))

1. All plugs must be capable of meeting the requirements of the plugs go and no-go gauges.
2. Section BB applies to any jack contact receiving slot which does not contain a plug contact.
3. The preferred major cordage cross section is 2.5400 mm (.100 inch) max. thick by 5.0800 mm (.200 inch) max. wide, with rounded corners. It should exit the plug on the plug centerline. Other cordage configurations are permitted but may inhibit the special features of some network jack enclosures.
4. The standard plug length is 11.6840 mm (.460 inch) max. Plugs may be made longer than standard or adapted for direct use on special cords, adapters with out cordage, and on apparatus or equipment subject to the limitations described in the Section 68.500 introductory paragraphs. Plugs longer than standard may inhibit the special features of some network jack enclosures.
5. A 12.0396 mm (.474 inch) minimum tab length is required. It is preferred that a maximum tab length be no longer than 13.2080 mm (.520 inch). Longer tabs may be used with the same limitations as described in Note 4.
6. To obtain maximum plug guidance when 6-position plugs are inserted in 8-position jacks, it is desirable to extend the front plug nose to the 2.3368 mm (.092 inch) maximum.
7. These dimensions apply to the location of jack contact receiving slots. It is desirable that plug contacts be centered axially in these slots, but centering is not required.
8. The 6.0452/6.1722 mm (.238/.243 inch) dimension is preferred to obtain maximum plug guidance in jacks with more than 6 conductors. A tolerance range of 5.9182/6.1722 mm (.233/.243 inch) is permitted, but may create targeting problems in 8-position jacks.
9. The center rib centerline shall be coincident with the plug width 9.6520 mm (.380 inch) ref. centerline within +/− .0762mm (+/− .003 inch).

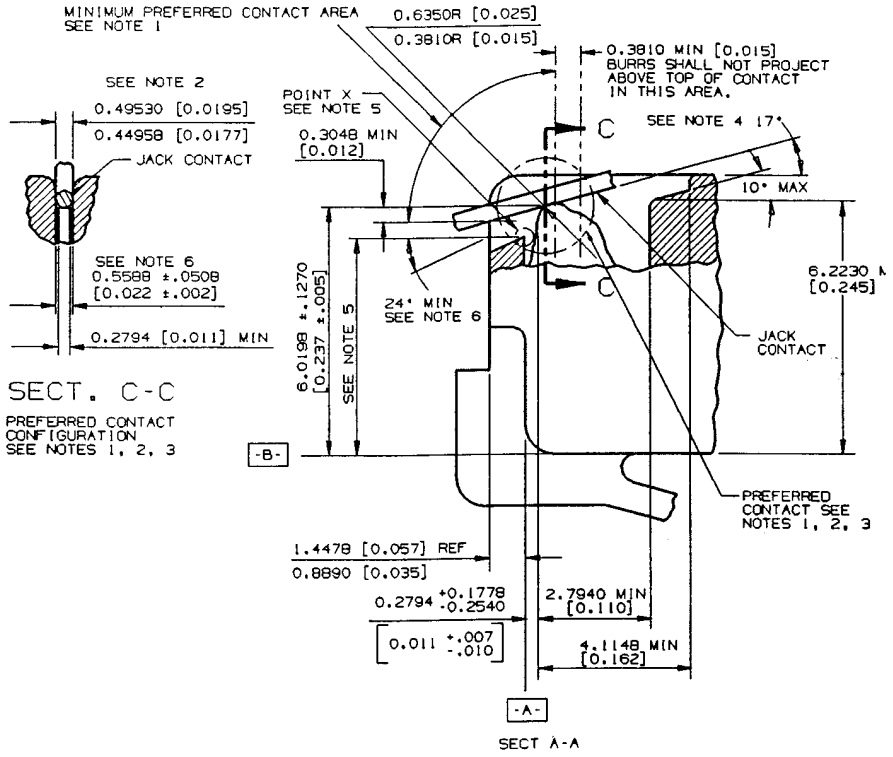

NOTE: ALL NOTES FOLLOW THIS FIGURE.

NOTE: THE 8 POSITION PLUG/JACK CONTACT SPECIFICATION IS IDENTICAL.

FIGURE 68.500(a)(3)(i)- 6 POSITION PLUG
PLUG /JACK CONTACT SPECIFICATION

NOTES: (Notes apply to Figure 68.500(a)(3)(i))

1. The plug/jack contact interface should be hard gold to hard gold and should have a minimum gold thickness of .0012700 mm (0.000050 inch) on each side of the interface. The minimum contact force should be .98 N (100 grams). Any non-gold contact material must be compatible with gold and provide equivalent contact performance. A smooth, burr-free surface is required at the interface in the area shown.
2. The jack contact design is based upon .4572 mm (.018 inch) spring temper phosphor bronze round wire in the modular plug blade and jack contact interface. Other contact configurations that provide contact performance equal to or better than the preferred configurations and do not cause damage to the plug or jack are permitted. The preferred jack contact width is .44958/.49530 mm (.0177/.0195 inches). Deviations from the preferred jack contact width are permitted for round contacts as well as noncircular cross sectional shapes but they must be compatible with existing plug configurations. The requirements of Note 1 apply to all possible contact areas.
3. The configuration of the plug contact and the front plastic of the plug should prevent jack contacts from being damaged during plug insertion into jacks.
4. This is the suggested nominal contact angle between plugs and jacks with the plug latched into the jack. If this angle becomes greater than 24 degrees loss of electrical contact may occur between the plug and jack. If the nominal contact angle becomes less than 13 degrees, interference between jack contacts and the internal plastic in the plug may occur.
5. To avoid loss of electrical contact, the preferred dimension from datum B to the highest point ''X'' should be 5.0800 mm (.200 inch) max. A dimension greater than 5.3594 mm (.211 inch) may result in loss of electrical contact between plugs and jacks. The 5.3594 mm (.211 inch) max. shall be considered an absolute maximum.
6. The 24 degree min. angle applies only to plugs with front plastic walls higher than 4.8260 mm (.190 inches).

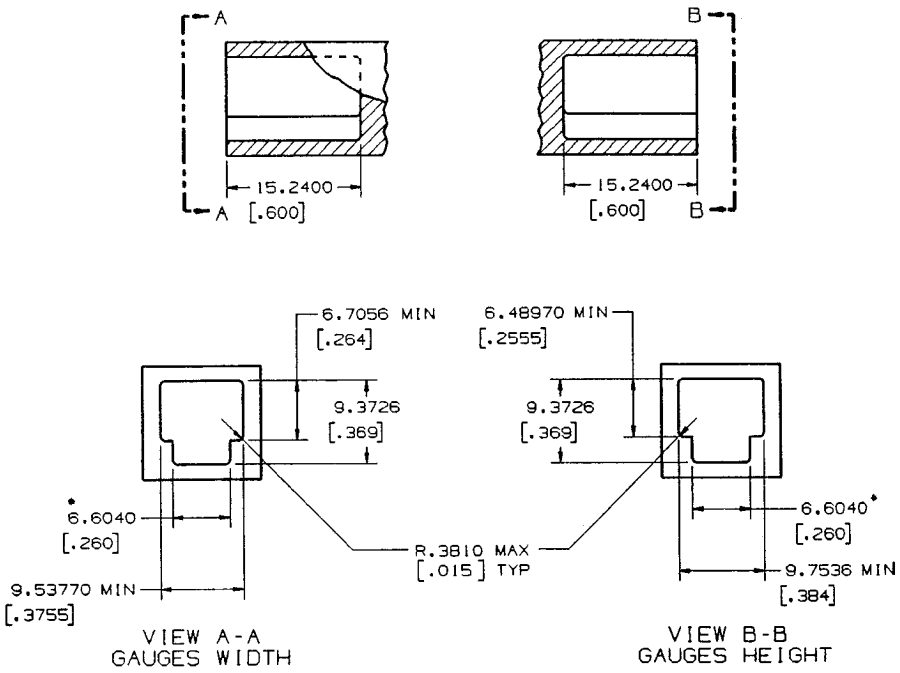

NO-GO GAUGE

NOTES:

1. THE PLUG SHALL NOT BE CAPABLE OF ENTERING THE GAUGE MORE THAN 1.7780mm [.070] BEYOND DATUM-A- (SEE FIGURE 68.500(a)(2)(i)) WITH 8.90 newtons[2.0 POUNDS] INSERTION FORCE.

2. NON-TOLERANCED DIMENSIONS GIVEN TO FOUR PLACES SHALL BE WITHIN ±0.0508mm [.002].

3. *6.6040mm [.260] DIMENSION TO BE CENTRALLY LOCATED WITH RESPECT TO 9.7536mm [.384] MINIMUM AND 9.53770mm [.3755] MINIMUM WITHIN ±0.0508mm [.002] .

FIGURE 68.500(a)(4)(i)- 6 POSITION PLUG
MINIMUM PLUG SIZE

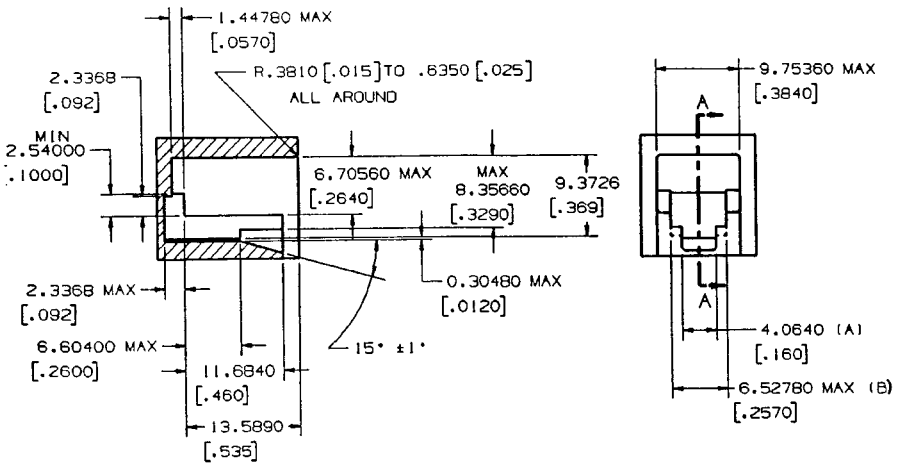

SECT. A-A

GO GAUGE

NOTES

1. THE PLUG SHALL BE CAPABLE OF INSERTION AND LATCHING INTO THE GUAGE WITH 22.24 newtons [5 POUNDS] OR LESS INSERTIONS FORCE. PLUG LATCHING BAR SHALL BE DEPRESSED SO AS NOT TO INTERFERE WITH THE PLUG ENTRY. AFTER INSERTION AND LATCHING, PLUG SHALL BE CAPABLE OF REMOVAL, WITH THE LATCH DEPRESSED, WITH A REMOVAL FORCE OF 44.48 newtons [10 POUNDS] OR LESS APPLIED AT AN ADVANTAGEOUS ANGLE.
2. DIMENSIONS GIVEN TO FOUR DECIMAL PLACES SHALL BE WITHIN ±.0508mm [±.002].
3. DIMENSIONS (A) AND (B) TO BE CENTRALLY LOCATED WITH RESPECT TO 9.75360mm [.3840] MAX. JACK OPENING WIDTH WITHIN ±0.0254mm [.001].
4. DO NOT SCALE DRAWINGS FOR EXTERNAL CONFIGURATION.

FIGURE 68.500(a)(5)(i)- 6 POSITION PLUG
MAXIMUM PLUG SIZE

(b) *Miniature 6-position jack:*

(1) [Reserved]

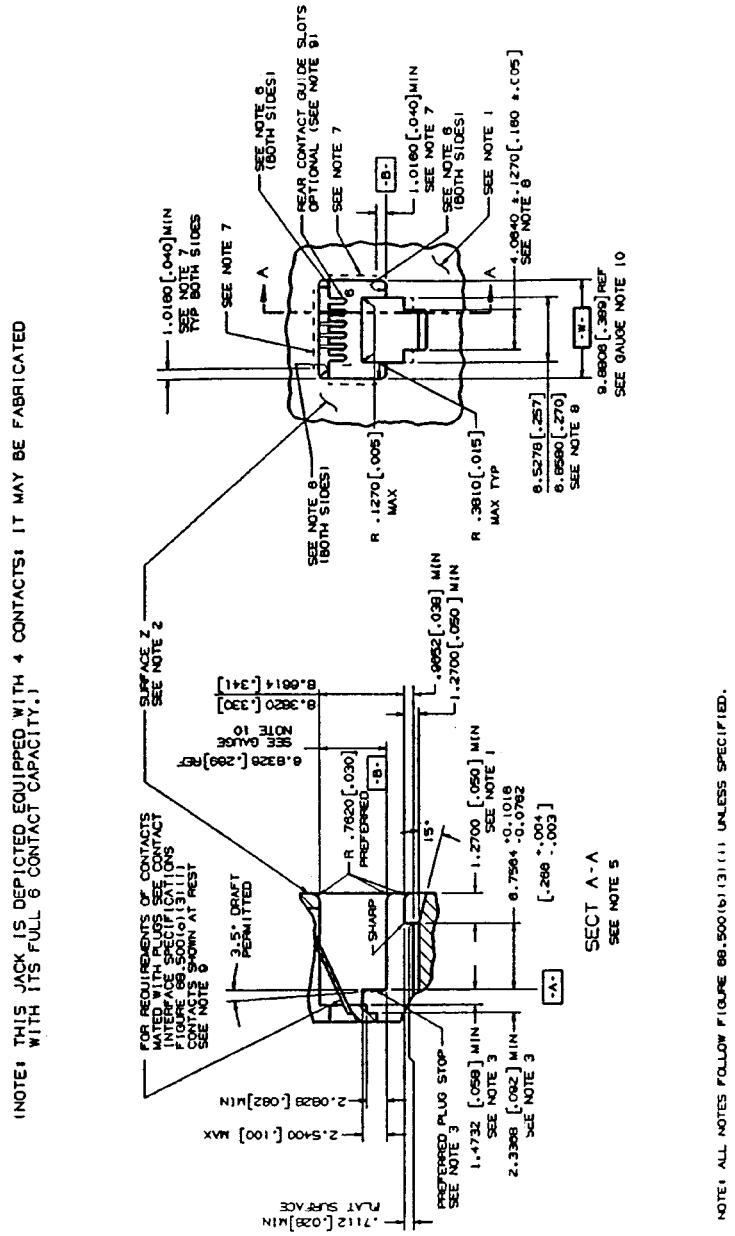

FIGURE 68.500(b)(2)(ii)- 6 POSITION JACK MECHANICAL SPECIFICATION

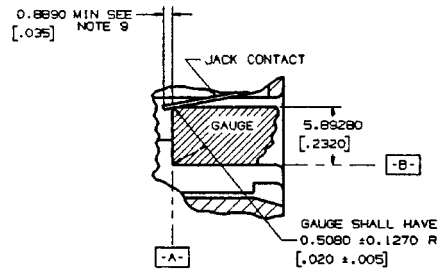

SEC A-A

(SHOWN WITHOUT REAR CONTACT GUIDES)

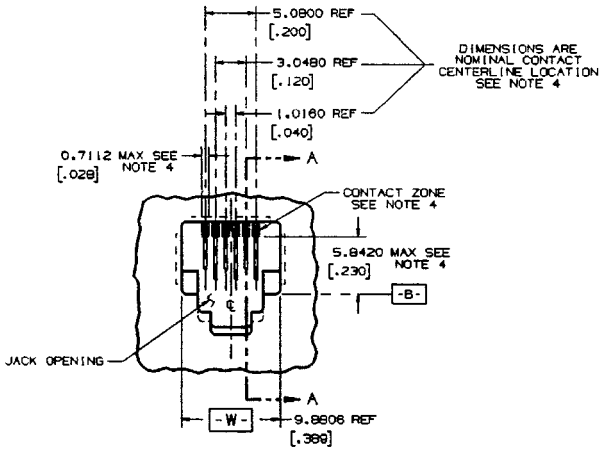

VIEW OF CONTACT ZONE

(SHOWN WITHOUT REAR CONTACT GUIDES)

NOTE: ALL NOTES FOLLOW THIS FIGURE.

FIGURE 68.500(b)(3)(i)- 6 POSITION JACK
MECHANICAL SPECIFICATIONS (CONTINUED)

NOTES: (Notes apply to Figures 68.500(b)(2)(i) and 68.500(b)(3)(i).)

1. Front surface projections beyond the 1.2700 mm (.050 inch) min. shall be configured so as not to prevent finger access to the plug release catch (Reference Figure 68.500(a)(2)(i), 6-Position Plug, Mechanical Specifications). A catch length greater than 1.2700 mm (.050 inch) is beneficial in providing greater breakout strength.
2. Surface Z need not be planar or coincident with the surface under the plug release catch. Surface Z projections must not prevent insertion, latching, and unlatching of the standard 6-position plug described in § 68.500(a).
3. The preferred plug stop surface is indicated. If some other internal feature is used as a plug stop, it must be located so that the axial movement of a latched plug is no greater than 1.1430 mm (0.045 inch).
4. To prevent mistargeting between the plug and jack contacts, the jack contacts should be completely contained in their individual contact zones, .7112 mm (.028 inch) max. wide, where they extend into the jack openings. There is no location requirement for jack contacts below these zones 5.8420 mm (.230 inch) max., but adequate contact separation must be maintained to prevent electrical breakdown. These shaded contact zones should be centrally located, (included all locating tolerances), about the jack opening width 9.8806 mm (.389 inch) Ref, (Datum -W-). Contacts located outside of these zones may result in mistargeting between the jack and plug contacts.
5. All inside and outside corners in the plug cavity to be .3810 mm (.015 inch) radius max. unless specified.
6. These surfaces shall have 0°15′ maximum draft.
7. Relief inside the dotted areas on 3 sides of the jack opening is permitted. The 6.8326 mm (.269 inch) Ref and 9.8806 mm (.389 inch) Ref Gauge Requirements must be maintained in each corner, (ref. 1.0160 mm (0.040 inch) min), to assure proper plug/jack interface guidance. A .8128 mm ±.1270 mm (.032 inch ±.005 inch) relief on the top side, (opposite plug catch), is required on jacks in connecting blocks which mount and connect portable wall telephones so as to assure interface with the special purpose sliding modular plug used on many wall telephone sets.
8. 4.0640 mm (.160 inch) and 6.5278/6.8580 mm (.257/.270 inch) dimensions to be centrally located to jack opening width -W- within ±.1778 mm (0.007 inch).
9. Minimum acceptable jack contact length. When contact guide slots are used, the contacts must always be contained inside the guide slots and the contacts must move freely in the slots so as not to restrain plug insertion or damage jack contacts.
10. Gauge Requirements:

GO: The jack shall be capable of accepting a 9.7536 x 6.7056 mm (0.3840 x 0.2640 inch) gauge and the gauge shall be capable of being removed with a maximum force of 8.9 newtons (2 pounds).

NO GO: The jack shall not accept either a 10.00760 x 6.45160 mm (0.3940 x 0.254 inch) horizontal width of opening gauge or a 6.95960 x 9.5504 mm (.2740 x .376 inch) vertical height of opening gauge. However, if either gauge is accepted the force necessary to remove the gauge shall be minimum .83 newtons (3.0 ounces).

Removal forces do not include forces contributed by contact springs nor shall external forces be applied to the jack that will affect these removal forces.

Gauges shall have a .7620 mm (.030 inch) radius on the nose and a .3810 mm (0.015 inch) radius on all edges with clearance provided for contacts.

(c) *Miniature 8-position plug, unkeyed:*

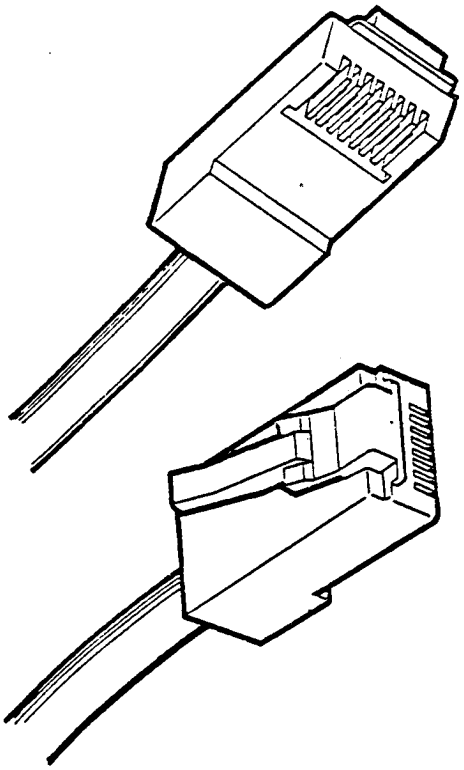

Figure 68.500(c)(1)(i) – View

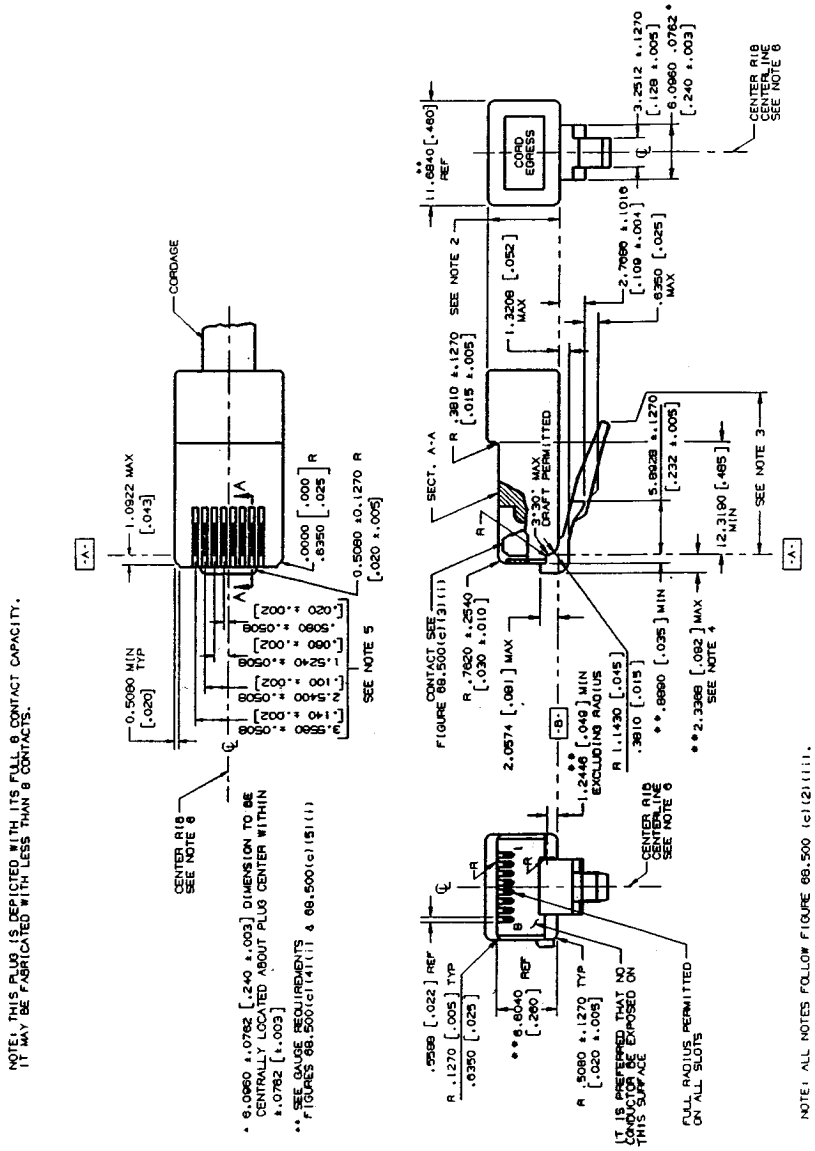

FIGURE 68.500(c)(2)(i) - 8 POSITION UNKEYED PLUG, MECHANICAL SPECIFICATION

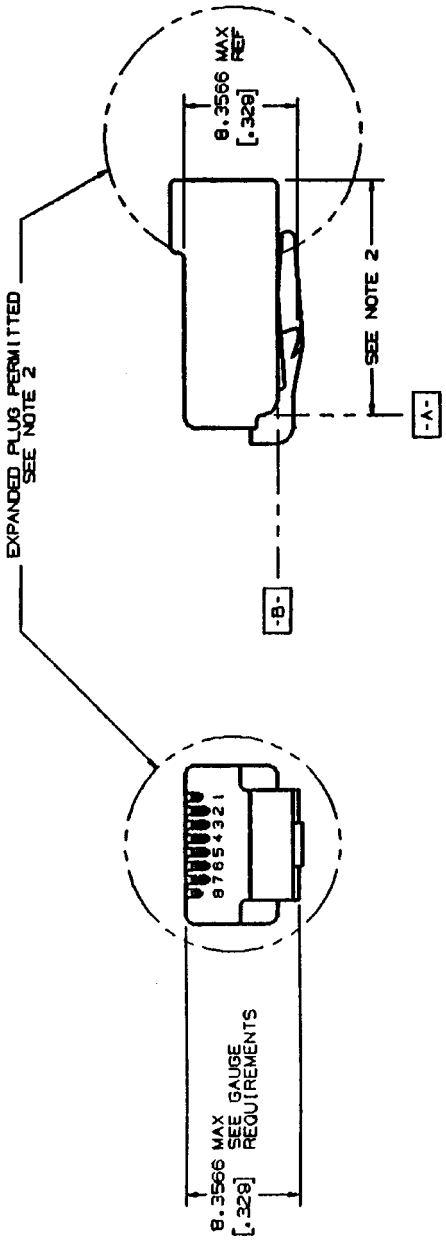

NOTE: ALL NOTES FOLLOW THIS FIGURE.

FIGURE 68.500(c)(2)(ii) - 8 POSITION UNKEYED
PLUG, MECHANICAL SPECIFICATION (CONTINUED)

NOTES: (Notes apply to Figures 68.500(c)(2)(i) and 68.500(c)(2)(ii))

1. All plugs must be capable of meeting the requirements of the plug go and no-go gauges.
2. The standard plug height in the area shown is 8.0010 mm (.315 inch) maximum. The standard plug length is 23.1140 mm (.910 inch) maximum. Plugs may be made longer than standard or adapted for direct use on special cords, adapters without cordage, apparatus or equipment subject to the limitations described in the introductory paragraphs of 68.500. Plugs longer and/or higher than standard may inhibit the special features of some network jack enclosures.
3. A 14.6050 mm (.575 inch) minimum tab length is required. It is preferred that a maximum tab length be no longer than 15.8750 mm (.625 inch). Longer tabs may be used with the same limitations described in Note 2.
4. To obtain maximum plug guidance in jacks, it is desirable to extend the front plug nose to the 2.3368 mm (.092 inch) maximum.
5. These dimensions apply to the location of jack contact receiving slots. It is desirable that plug contacts be centered axially in these slots, but centering is not required.
6. The center rib centerline shall be coincident with the plug width 11.6840 mm ref. (.460 inch ref.) centerline within ±.0762 mm (.003 inch).

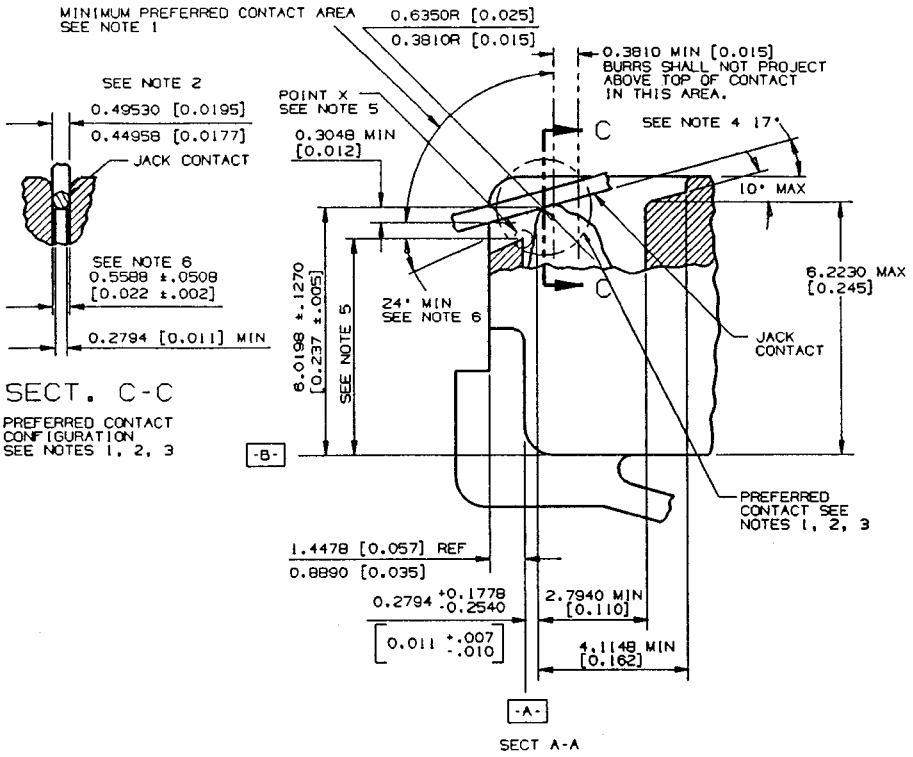

NOTE: ALL NOTES FOLLOW THIS FIGURE.

NOTE: THE 6 POSITION PLUG/JACK CONTACT SPECIFICATION IS IDENTICAL.

FIGURE 68.500(c)(3)(i)- 8 POSITION UNKEYED PLUG
PLUG /JACK CONTACT SPECIFICATION

NOTES: (Notes apply to Figure 68.500(c)(3)(i))

1. The plug/jack contact interface should be hard gold to hard gold and should have a minimum gold thickness of .0012700 mm (.000050 inch) on each side of the interface. The minimum contact force should be .98 N (100 grams). Any non-gold contact material must be compatible with gold and provide equivalent contact performance. A smooth, burr-free surface is required at the interface in the area shown.
2. The jack contact design is based upon .4572 mm (.018 inch) spring temper phosphor bronze round wire in the modular plug blade and jack contact interface. Other contact configurations that provide contact performance equal to or better than the preferred configurations and do not cause damage to the plug or jack are permitted. The preferred jack contact width is .44958/.49530 mm (.0177/.0195 inches). Deviations from the preferred jack contact width are permitted for round contacts as well as noncircular cross sectional shapes but they must be compatible with existing plug configurations. The requirements of Note 1 apply to all possible contract areas.
3. The configuration of the plug contact and the front plastic of the plug should prevent jack contacts from being damaged during plug insertion into jacks.
4. This is the suggested nominal contact angle between plugs and jacks with the plug latched into the jack. If this angle becomes greater than 24 degrees loss of electrical contact may occur between the plug and jack. If the nominal contact angle becomes less than 13 degrees, interference between jack contacts and the internal plastic in the plug may occur.
5. To avoid loss of electrical contact, the preferred dimension from datum B to the highest point ''X'' should be 5.0800 mm (.200 inch) max. A dimension greater than 5.3594 mm (.211 inch) may result in loss of electrical contact between plugs and jacks. The 5.3594 mm (.211 inch) max. shall be considered an absolute maximum.
6. The 24 degree min. angle applies only to plugs with front plastic walls higher than 4.8260 mm (.190 inches).

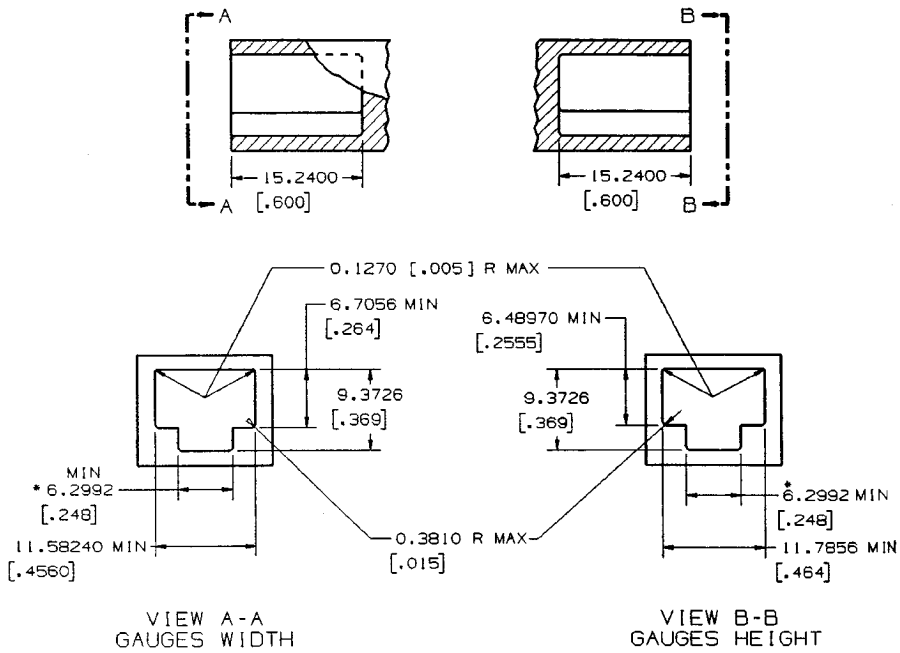

NO-GO GAUGE

NOTES:

1. THE PLUG SHALL NOT BE CAPABLE OF ENTERING THE GAUGE MORE THAN 1.7780mm [.070] BEYOND DATUM-A-(SEE FIGURE 68.500(c)(2)(i)) WITH 8.90 neuton [2.0 POUNDS] INSERTION FORCE.

2. NON-TOLERANCED DIMENSIONS GIVEN TO FOUR PLACES SHALL BE WITHIN ±0.0508mm [.002].

3. * 6.2992mm [.248] DIMENSION TO BE CENTRALLY LOCATED WITH RESPECT TO 11.7856mm [.464] MINIMUM AND 11.58240mm [.4560] MIMIMUM WITHIN ±0.0508mm [.002].

FIGURE 68.500(c)(4)(i)-8 POSITION UNKEYED PLUG, MINIMUM PLUG SIZE

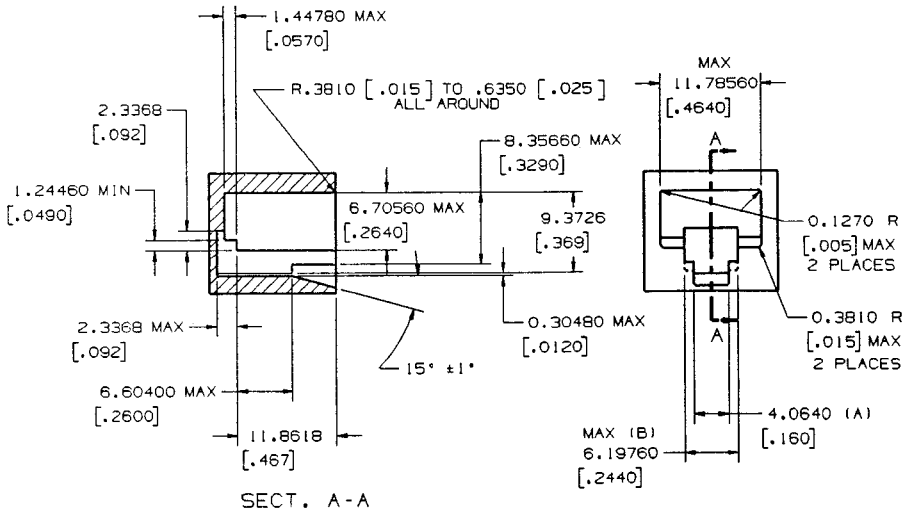

GO GAUGE

NOTES:

1. THE PLUG SHALL BE CAPABLE OF INSERTION AND LATCHING INTO THE GAUGE WITH 22.24 newtons [5 POUNDS] OR OR LESS INSERTION FORCE. PLUG LATCHING BAR SHALL BE DEPRESSED SO AS NOT TO INTERFERE WITH THE PLUG ENTRY. AFTER INSERTION AND LATCHING, PLUG SHALL BE CAPABLE OF REMOVAL, WITH THE LATCH DEPRESSED, WITH REMOVAL FORCE OF 44.48 newtons [10 POUNDS] OR LESS APPLIED AT AN ADVANTAGEOUS ANGLE.

2. DIMENSIONS GIVEN TO FOUR DECIMAL PLACES SHALL BE WITHIN ±.0508mm [.002].

3. DIMENSIONS (A) AND (B) TO BE CENTRALLY LOCATED WITH RESPECT TO 11.78560mm [.4640] MAX. JACK OPENING WIDTH WITHIN ±0.0254mm [.001].

4. DO NOT SCALE DRAWINGS FOR EXTERNAL CONFIGURATION.

FIGURE 68.500(c)(5)(i)-8 POSITION UNKEYED PLUG, MAXIMUM PLUG SIZE

(d) *Miniature 8-position series jack:*

APPENDIX A-17

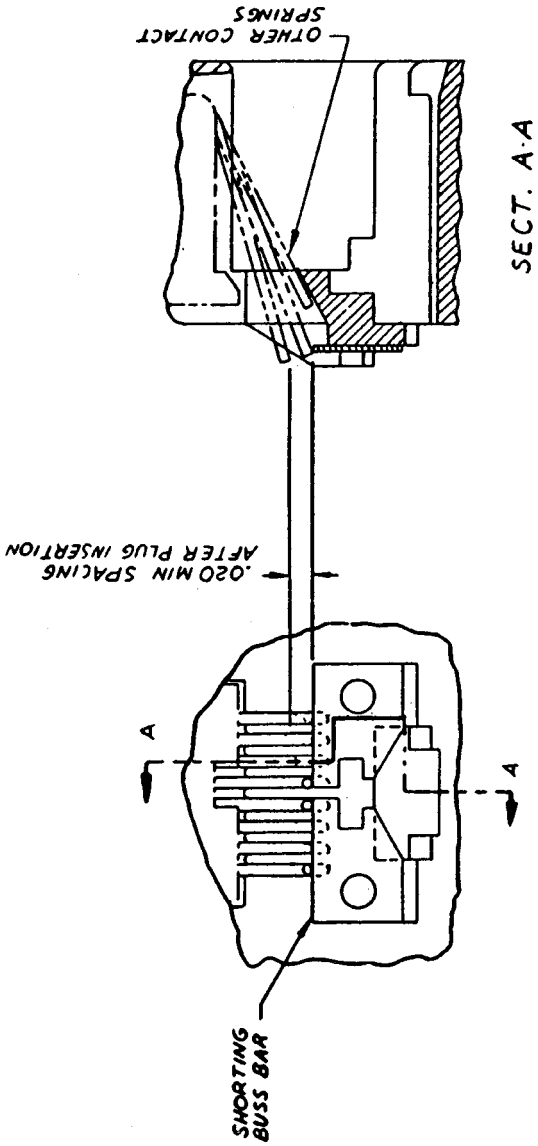

Figure 68.500(d)(3)--8 Position Series Jack, Contact Specification

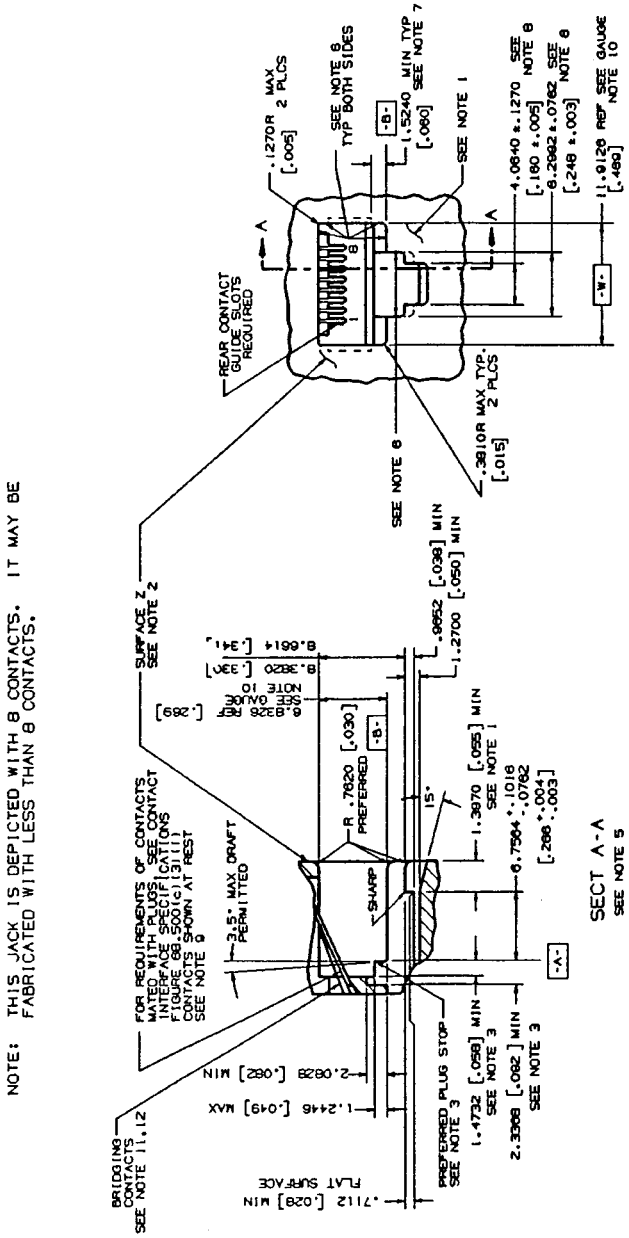

FIGURE 68.500(d)(2)(i)-8 POSITION SERIES JACK, MECHANICAL SPECIFICATION

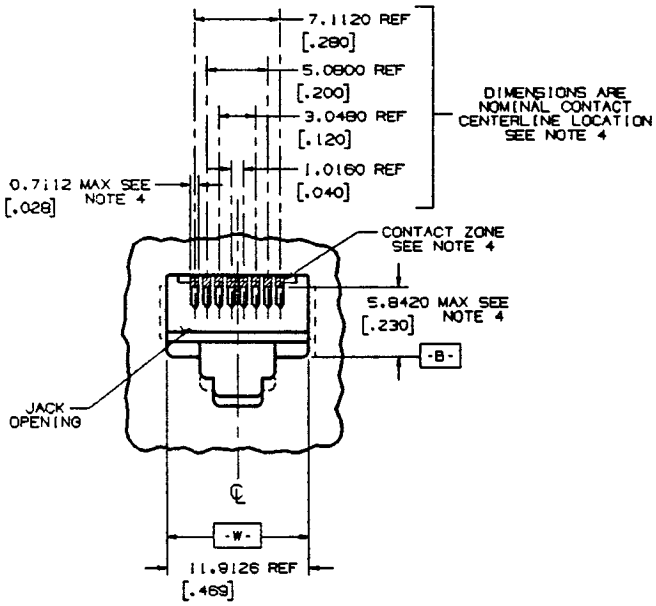

VIEW OF CONTACT ZONE

NOTE: ALL NOTES FOLLOW THIS FIGURE.

FIGURE 68.500(d)(3)(i)-8 POSITION SERIES JACK, MECHANICAL SPECIFICATION (CONTINUED)

NOTES: (Notes apply to Figures 68.500(d)(2)(i) and 68.500(d)(3)(i))

1. Front surface projections beyond the 1.3970 mm (.055 inch) minimum shall be configured so as not to prevent finger access to the plug release catch (Reference Figure 68.500(a)(2)(i) and Figure 68.500(c)(2)(i) 6 and 8-Position Plug, Mechanical Specifications). A catch length greater than 1.3970 mm (.055 inch) is beneficial in providing for greater breakout strength and improved guidance when interfacing with a 6-position plug.
2. Surface Z need not be planar or coincident with the surface under the plug release catch. Surface Z projections must not prevent insertion, latching, and unlatching of the standard 8-position plug on Figure 68.500(c)(2)(i).
3. The preferred plug stop surface is indicated. If some other internal feature is used as a plug stop, it must be located so that the axial movement of a latched plug is no greater than 1.1430 mm (.045 inch).
4. To prevent mistargeting between the plug and jack contacts, the jack contacts should be completely contained in their individual contact zones, (.7112 mm (.028 inch) max. wide), where they extend into the jack openings. There is no location requirement for jack contacts below these zones (5.8420 mm (.230 inch) max.), but adequate contact separation must be maintained to prevent electrical breakdown. These shaded contact zones should be centrally located, (include all locating tolerances), about the jack opening width 11.9126 mm (.469 inch) Ref, (Datum -W-). Contacts located outside of these zones may result in mistargeting between the jack and plug contacts.
5. All inside and outside corners in the plug cavity to be .3810 mm (.015 inch) radius max. unless specified.
6. These surfaces shall have 0°15′ maximum draft.
7. Relief inside the dotted areas on both sides of the jack opening is permitted. The 6.8326 mm (.269 inch) Ref and 11.9126 mm (.469 inch) Ref Gauge Requirements must be maintained in each of the corners indicated, (Ref. 1.5240 mm (.060 inch) min), to assure proper plug/jack interface guidance.
8. 4.0640 mm (.160 inch) and 6.2992 mm (0.248 inch) dimensions to be centrally located to jack opening width -W- within ±−. 1270 mm (.005 inch).
9. The contact lengths shall be such that the contacts will always be contained inside the guide slots, and the contacts must move freely in the slots so as not to restrain plug insertion or damage jack contacts.
10. Gauge Requirements:

GO: The jack shall be capable of accepting an 11.7856 x 6.7056 mm (.4640 x .2640 inch) gauge and the gauge shall be capable of being removed with a maximum force of 8.9 newtons (2.0 pounds).

NO GO: The jack shall not accept either a 12.0396 x 6.4516 mm (.4740 x .254 inch) horizontal width of opening gauge or a 6.9596 x 11.5824 mm (.2740 x .456 inch vertical height of opening gauge. However, if the gauge is accepted, the force necessary to remove the gauge shall be a minimum of .83 newtons (3.0 ounces).

Removal forces do not include forces contributed by contact springs nor shall external forces be applied to the jack that will affect these removal forces.

Gauges shall have a .7620 mm (.030 inch) radius on the nose and a .3810 mm (.015 inch) radius on all edges with clearance provided for contacts.

11. With no plug inserted, conductors 1 and 4 are bridged as well as conductors 5 and 8. With a miniature 8-position plug inserted into the jack, the bridge connectors are broken and a series connection can be made in both sides of the line. With a 6-position plug inserted, the bridged connections remain unbroken.
12. The jack contact/bridging interface should be hard gold to hard gold and should have a minimum gold thickness of .0012700 mm (.000050 inch) on each side of the interface. The minimum contact bridging force should be .294 N (30 grams). Any non-gold contact material must be compatible with gold and provide equivalent contact performance.

(e) *50-position miniature ribbon plug:*

(1) Contact finish in the region of contact shall be gold, .0007620 mm (.000030 inch) minimum thickness, electrodeposited hard gold preferred.[1]

(2) ''Datum B'' is the center line of contact cavities.

(3) The center line of each contact shall be located within .2286 mm (.009 inch) of true position with respect to ''Datum B''.[1]

(4) Contact width at region of contact shall be 1.1430±.0508 mm (.045±0.002 inch).[1]

(5) Center line of shell dimension indicated shall be within .1270 mm (.005 inch) of ''Datum B''.[1]

(6) Center line of barrier dimension indicated shall be within .1270 mm (.005 inch) of ''Datum B''.[1]

(7) ''Surface X'' shall have a .0001016 mm (4 microinch) finish or better; finishing shall be done in the direction of the arrow.[2]

(8) A force of not more than 178 newtons (40 pounds) shall be sufficient to fully insert the plug onto the sizing gauge shown on Figure 68.500(e)(1). The plug is fully inserted when ''Surface A'' of the plug[1] touches ''Surface A'' of the sizing gauge.

[1] Figure 68.500(e)(1).

[2] Figures 68.500 (e)(2) and (e)(3).

(9) After one insertion of the plug on the sizing gauge, Figure 68.500(e)(2), a force of not more than 44.5 newtons (10 pounds) shall be sufficient to fully insert the plug on the continuity gauge shown in Figure 68.500(e)(3). The plug is fully inserted on the continuity gauge when ''Surface A'' of the plug[1] touches ''Surface A'' of the continuity gauge.

(10) When the plug is fully inserted on the continuity gauge, Figure 68.500(e)(3), after having been inserted once on the sizing gauge, Figure 68.500(e)(2), all contacts of the plug shall electrically contact the continuity gauge as determined by an electrical continuity test which applies an open circuit voltage of not more than 10 volts, and will not indicate continuity if the resistance of the circuit being checked is more than 200 ohms.

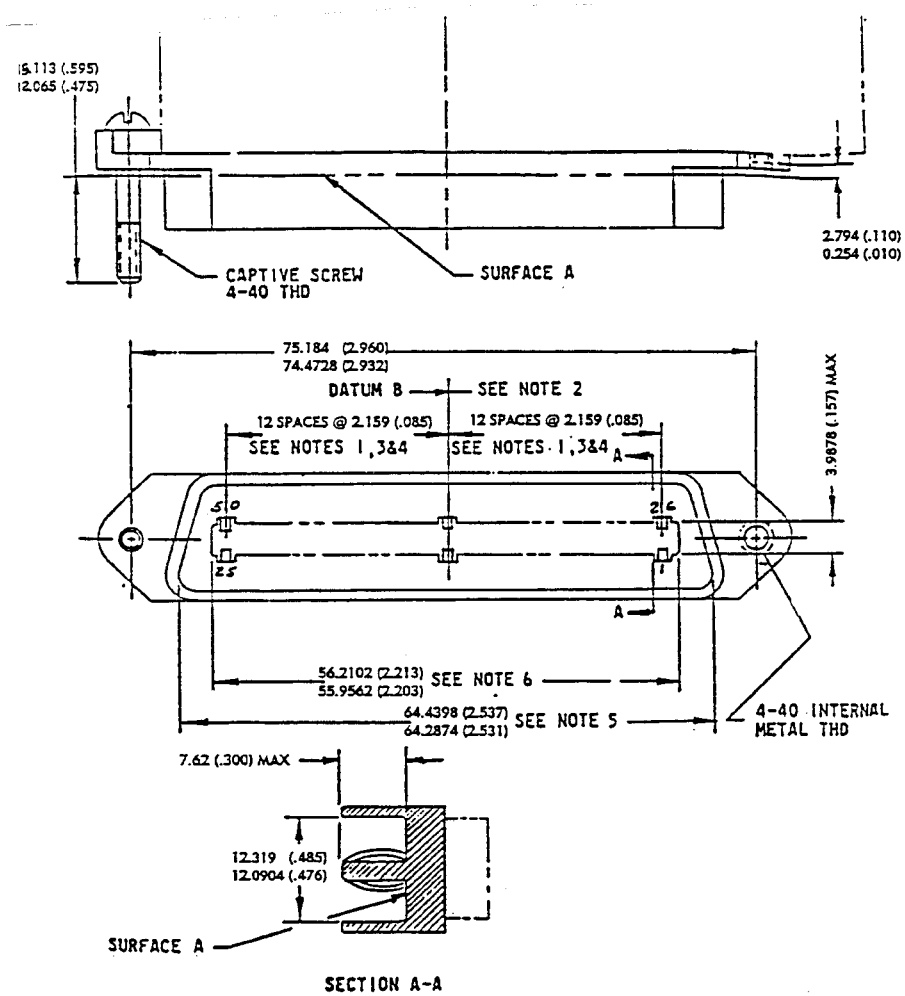

Figure 68.500(a)(1)--50 Position Miniature Ribbon Plug

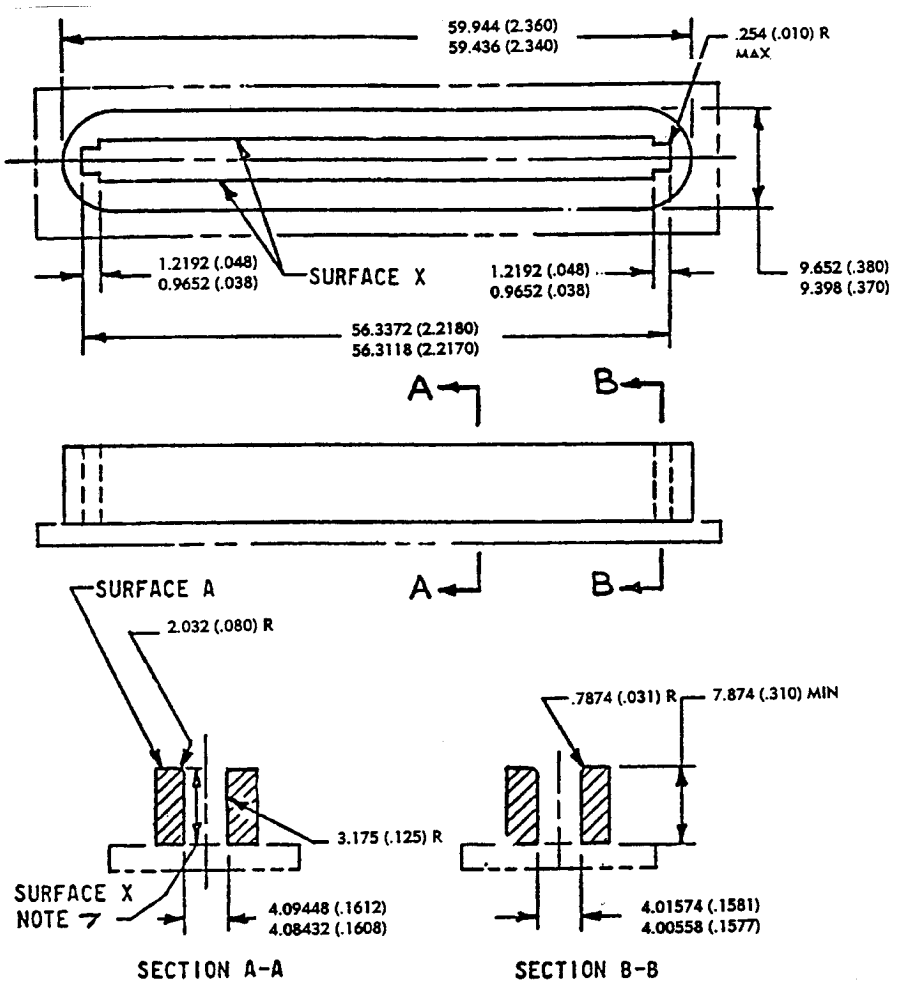

Figure 68.500(e)(2)--50 Position Miniature Ribbon Plug Sizing Guage

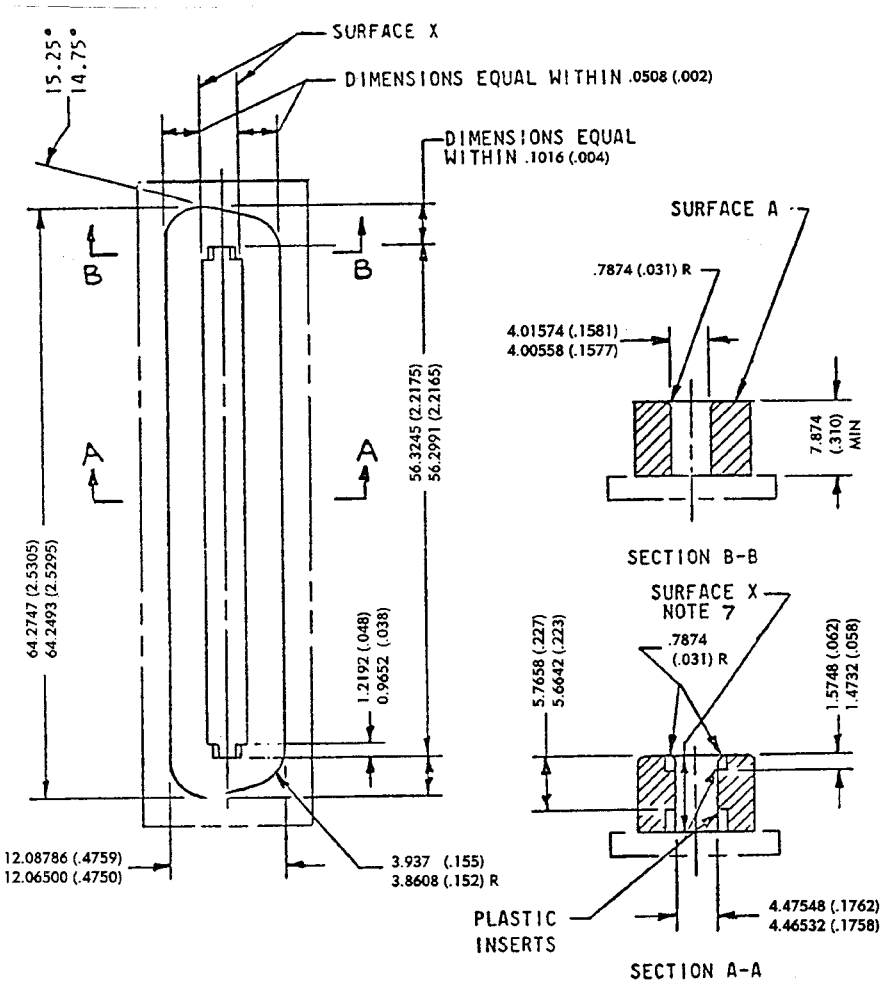

Figure 68.500(e)(3)--50 Position Miniature Ribbon Plug Continuity Guage

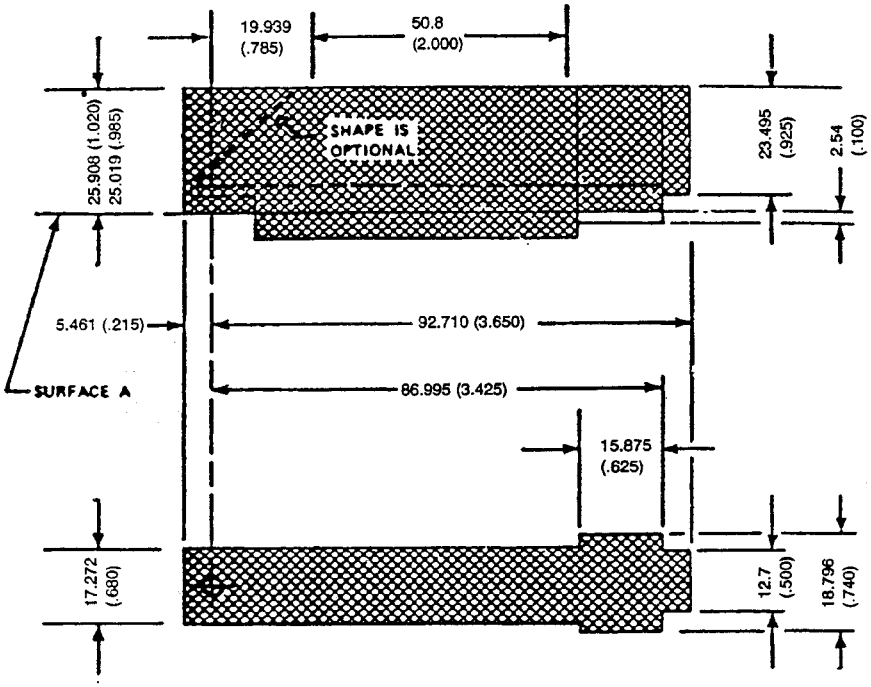

Figure 68.500(e)(4)

50-POSITION MINIATURE RIBBON PLUG - HOOD ENVELOPE

(f) *50-position miniature ribbon jack:*

(1) Contact finish in the region of contact shall be gold, .0007620 mm (.000030 inch) minimum thickness, electrodeposited hard gold preferred.[1]

(2) ''Datum B'' is the center line of contact cavities.

(3) The center line of each contact shall be located within .2286 mm (.009 inch) of true position with respect to ''Datum B''.[1]

(4) Contact width at region of contact shall be 1.1430±.0508 mm (.045±0.002 inch).[1]

(5) Center line of shell dimension indicated shall be within .1270 mm (.005 inch) of ''Datum B''.[1]

(6) Center line of cavity dimension indicated shall be within .1270 mm (.005 inch) of ''Datum B''.[1]

(7) ''Surface X'' shall have a .0001016 mm (4 microinch) finish or better; finishing shall be done in the direction of the arrow.[2]

(8) A force of not more than 134 newtons (30 pounds) shall be sufficient to fully insert the jack onto the sizing gauge shown on Figure 68.500(f)(2).

The jack is fully inserted when ''Surface A'' of the jack[1] touches ''Surface A'' of the sizing gauge.

(9) After one insertion of the jack on the sizing gauge, Figure 68.500(f)(2), a force of not more than 44.5 newtons (10 pounds) shall be sufficient to fully insert the jack on the continuity gauge shown in Figure 68.500(f)(3). The jack is fully inserted on the continuity gauge when ''Surface A'' of the jack[1] touches ''Surface A'' of the continuity gauge.

(10) When the jack is fully inserted on the continuity gauge, Figure 68.500(f)(3), after having been inserted once on the sizing gauge, all contacts of the jack shall electrically contact the continuity gauge as determined by an electrical continuity test which applies an open circuit voltage of not more than 10 volts, and will not indicate continuity if the resistance of the circuit being checked is more than 200 ohms.

[1] Figure 68.500(f)(1).

[2] Figures 68.500 (f)(2) and (f)(3).

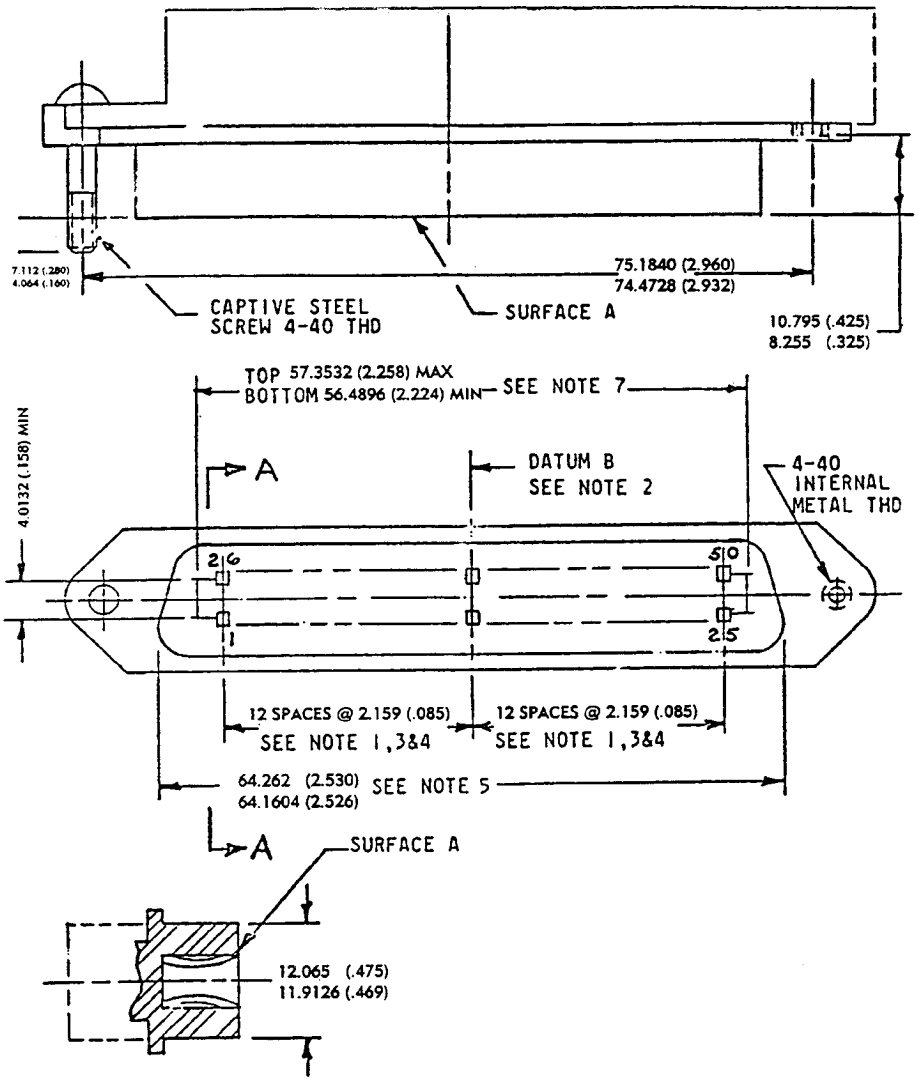

Figure 68.500(f)(1)--50 Position Miniature Ribbon Jack

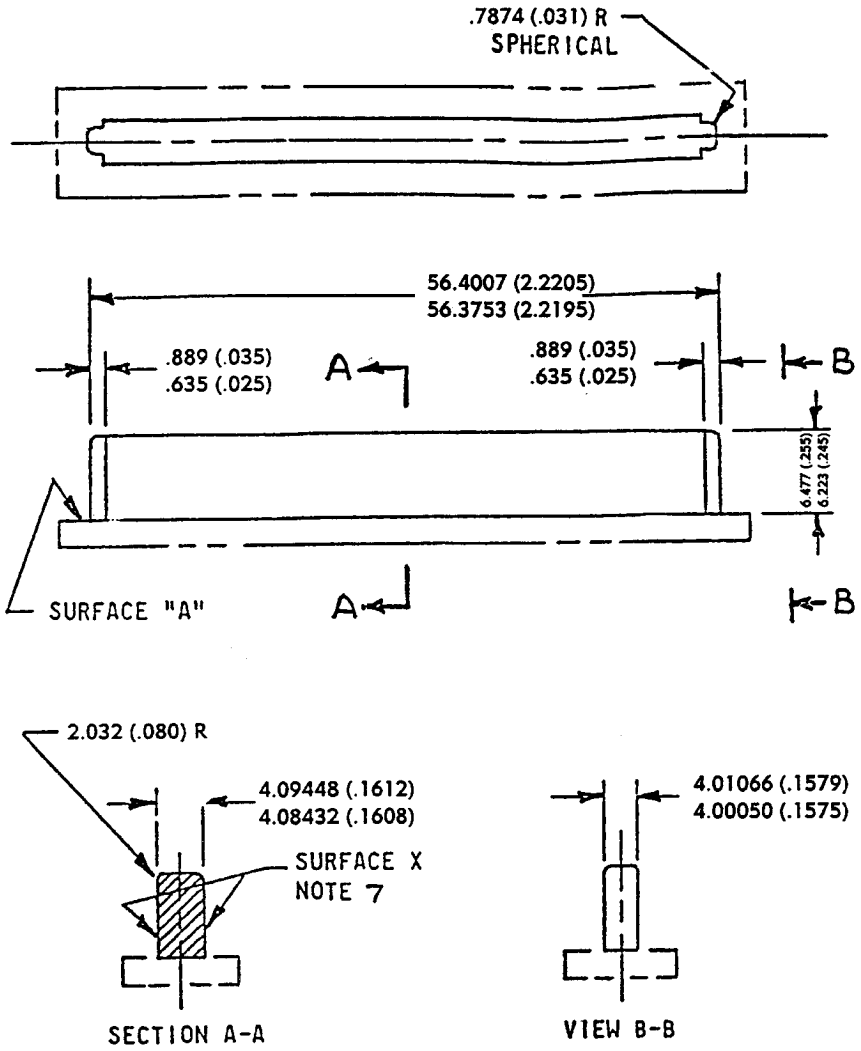

Figure 68.500(f)(2)--50 Position
Miniature Ribbon Jack
Sizing Guage

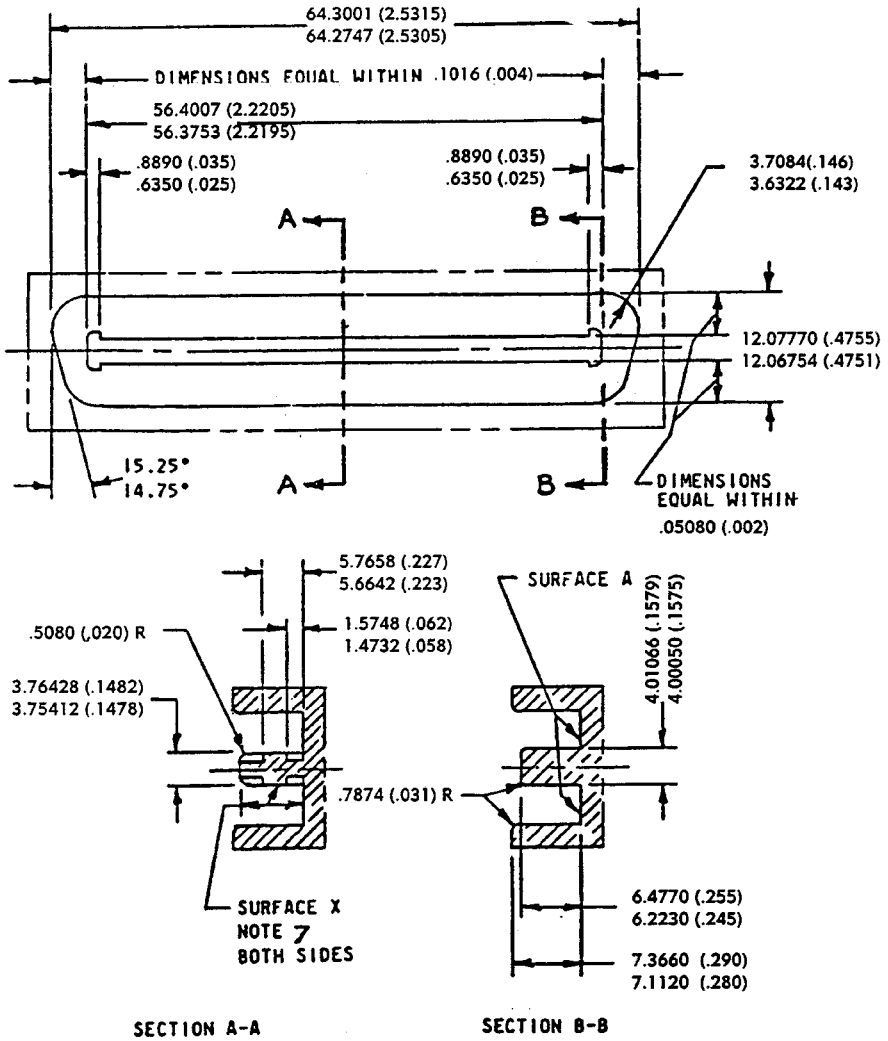

Figure 68.500(f)(3)--50 Position Miniature Ribbon Jack Continuity Gage

(g) *3-Position weatherproof plug:*

Contact blade material shall be brass, with minimum .00762 mm (.0003 inch) thick nickel plating.

NOTE: All linear dimensions are in millimeters (inches).

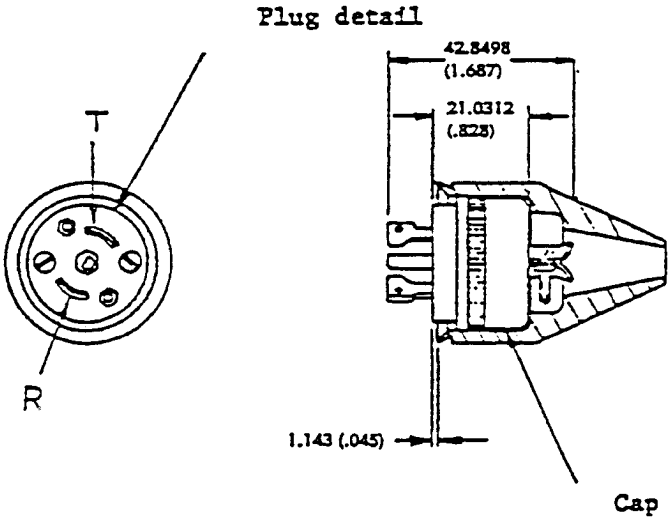

Figure 68.500(g)(1)--3 Position Plug Plug Assembly

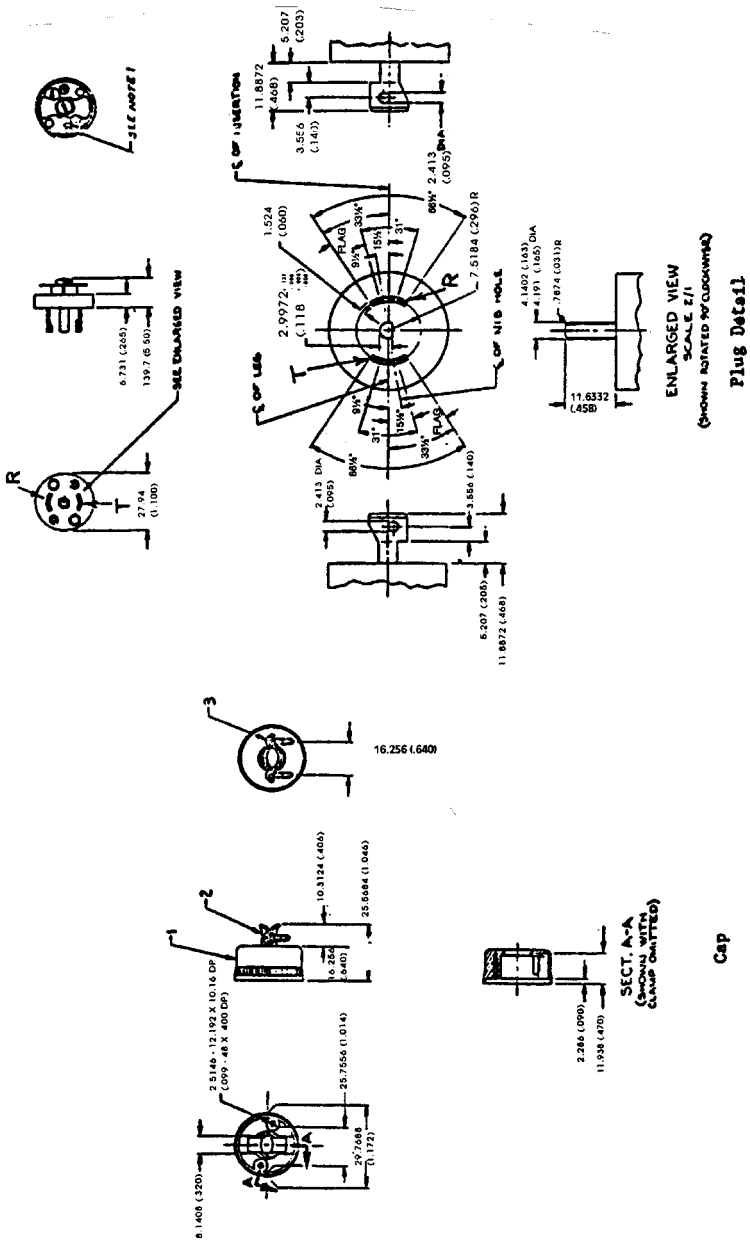

Figure 68.500(g)(2)--3 Position Plug Detail

(h) *3-Position weatherproof jack:*

Contact blade material shall be brass, with minimum .00762 mm (.0003 inch) thick nickel plating.

NOTE: All linear dimensions are in millimeters (inches).

(Note: All linear dimensions are in inches.)

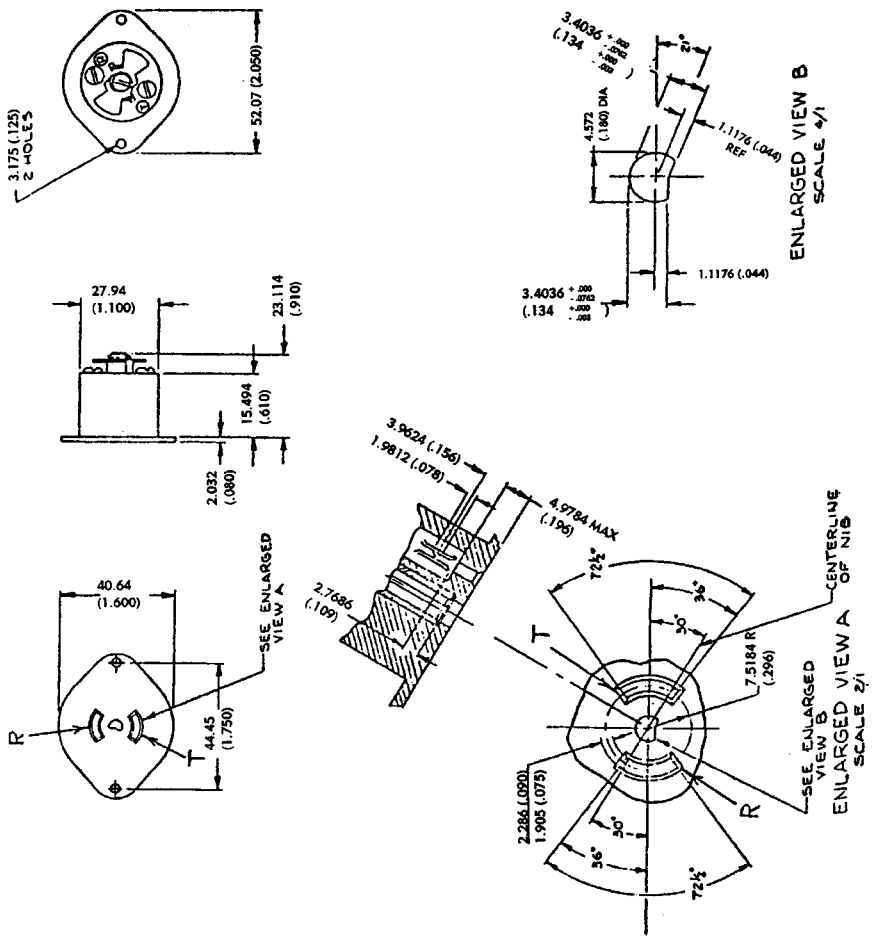

Figure 68.500(h)--3 Position Plug Detail

(Ed. 7/77)

(i) *Miniature 8-position plug, keyed:*

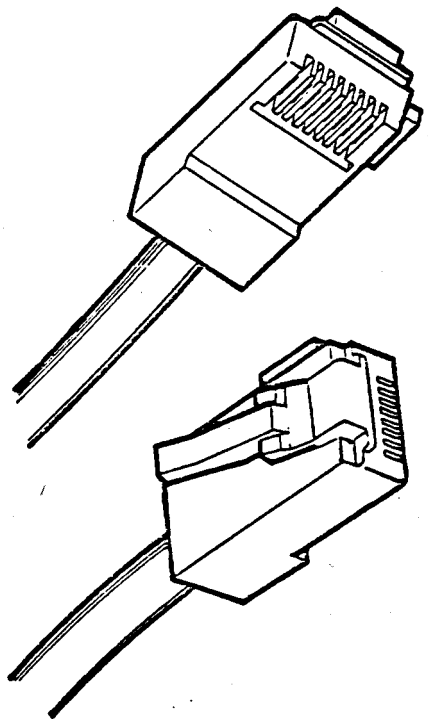

Figure 68.500(i)(1)(i)–View

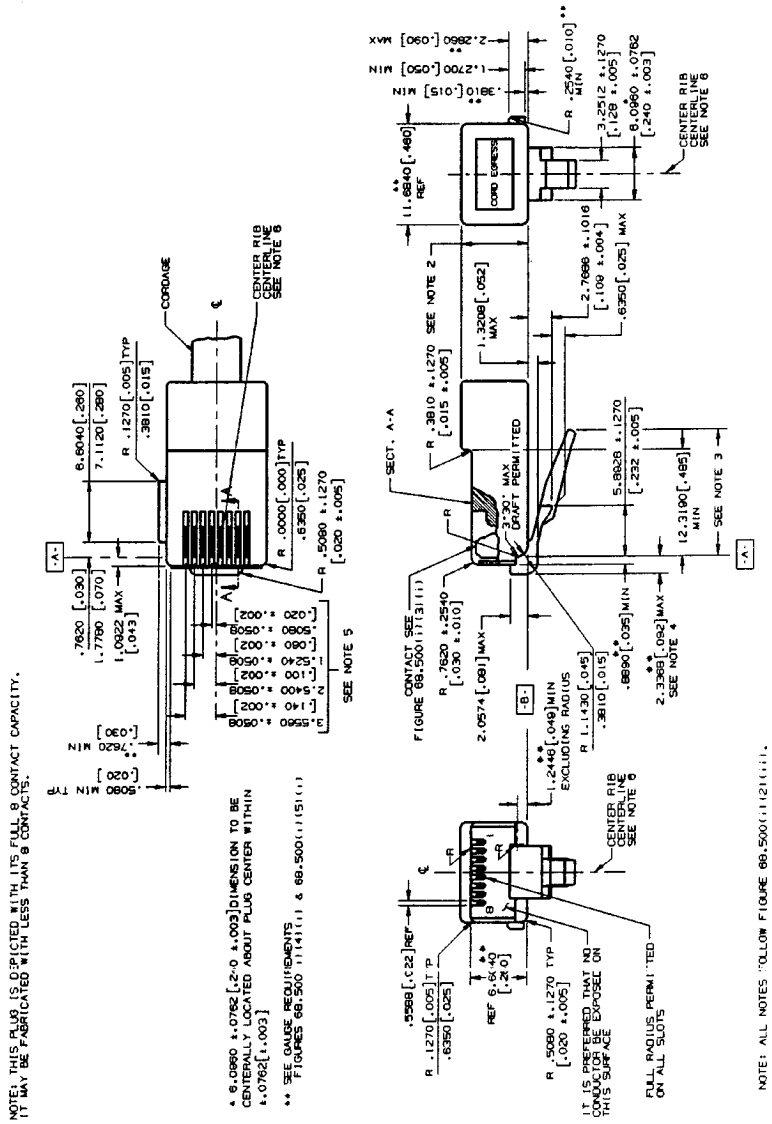

FIGURE 68.500(1)(2)(i)—8 POSITION KEYED PLUG, MECHANICAL SPECIFICATION

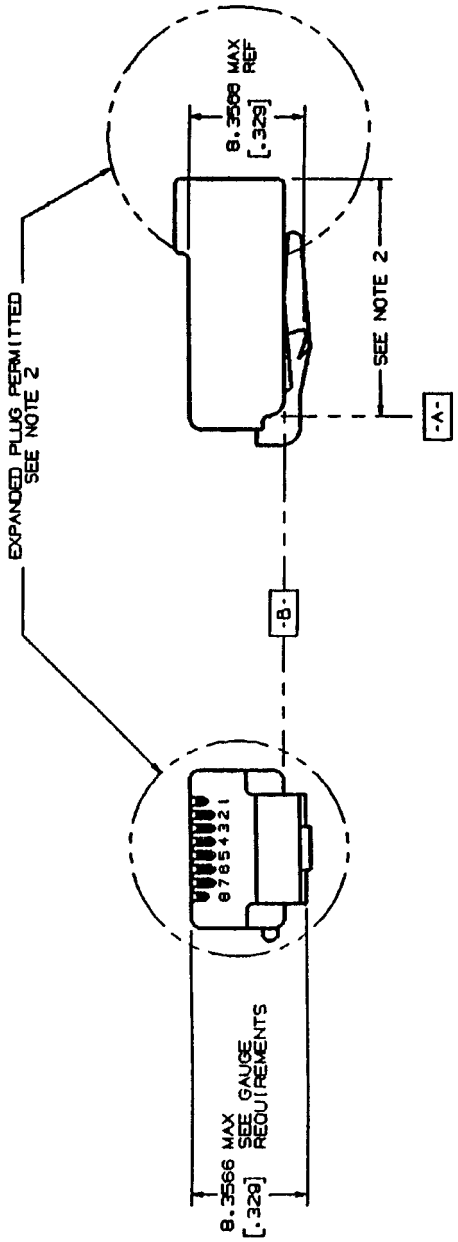

NOTE: ALL NOTES FOLLOW THIS FIGURE

FIGURE 68.500(i)(2)(ii) - 8 POSITION KEYED PLUG, MECHANICAL SPECIFICATION (CONTINUED)

NOTES: (Notes apply to Figures 68.500(i)(2) (i) and 68.500(i)(2)(ii))

1. All plugs must be capable of meeting the requirements of the plug go and no-go gauges.
2. The standard plug height in the area shown is 8.0010 mm (.315 inch) maximum. The standard plug length is 23.1140 mm (.910 inch) maximum. Plugs may be made longer than standard or adapted for direct use on special cords, adapters without cordage, apparatus or equipment subject to the limitations described in the introductory paragraphs of 68.500. Plugs longer and/or higher than standard may inhibit the special features of some network jack enclosures.
3. A 14.6050 mm (.575 inch) minimum tab length is required. It is preferred that maximum tab length be no longer than 15.8750 mm (.625 inch). Longer tabs may be used with the same limitations described in Note 2.
4. To obtain maximum plug guidance in jacks, it is desirable to extend the front plug nose to the 2.3368 mm (.092 inch) maximum.
5. These dimensions apply to the location of jack contact receiving slots. It is desirable that plug contacts be centered axially in these slots, but centering is not required.
6. The center rib centerline shall be coincident with the plug width, 11.6840 mm ref (.460 inch ref.) center line within ± .0762 mm (± .003 inch).

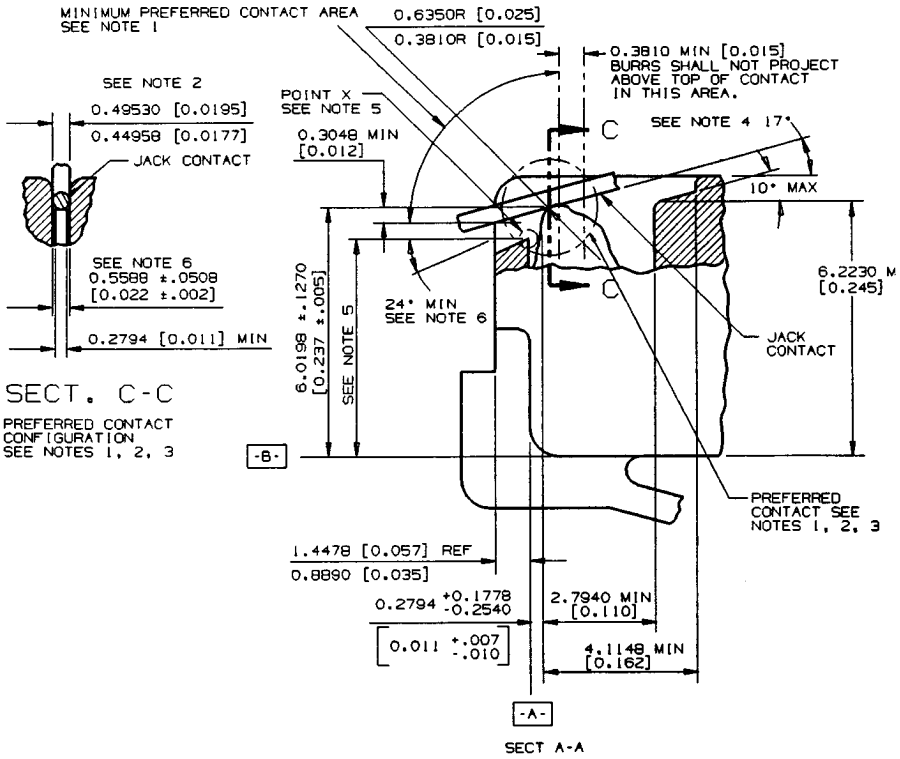

NOTE: ALL NOTES FOLLOW THIS FIGURE.

NOTE: THE 6 POSITION PLUG/JACK CONTACT SPECIFICATION IS IDENTICAL.

FIGURE 68.500(i)(3)(i)- 8 POSITION KEYED PLUG
PLUG /JACK CONTACT SPECIFICATION

NOTES: (Notes apply to Figure 68.500(i)(3)(i))

1. The plug/jack contact interface should be hard gold to hard gold and should have a minimum gold thickness of .0012700mm (.000050 inch) on each side of the interface. The minimum contact force should be .98 N (100 grams). Any non-gold contact material must be compatible with gold and provide equivalent contact performance. A smooth, burr-free surface is required at the interface in the area shown.
2. The jack contact design is based upon .4572 mm (.018 inch) spring temper phosphor bronze round wire in the modular plug blade and jack contact interface. Other contact configurations that provide contact performance equal to or better than the preferred configurations and do not cause damage to the plug or jack are permitted. The preferred jack contact width is .44958/.49530 mm (.0177/.0195 inches). Deviations from the preferred jack contact width are permitted for round contacts as well as noncircular cross sectional shapes but they must be compatible with existing plug configurations. The requirements of Note 1 apply to all possible contact areas.
3. The configuration of the plug contact and the front plastic of the plug should prevent jack contacts from being damaged during plug insertion into jacks.
4. This is the suggested nominal contact angle between plugs and jacks with the plug latched into the jack. If this angle becomes greater than 24 degrees loss of electrical contact may occur between the plug and jack. If the nominal contact angle becomes less than 13 degrees, interference between jack contacts and the internal plastic in the plug may occur.
5. To avoid loss of electrical contact, the preferred dimension from ''Datum B'' to the highest point ''X'' should be 5.0800 mm (.200 inch) max. A dimension greater than 5.3594 mm (.211 inch) may result in loss of electrical contact between plugs and jacks. The 5.3594 mm (.211 inch) max. shall be considered an absolute maximum.
6. The 25 degree min. angle applies only to plugs with front plastic walls higher than 4.8260 mm (.190 inches).

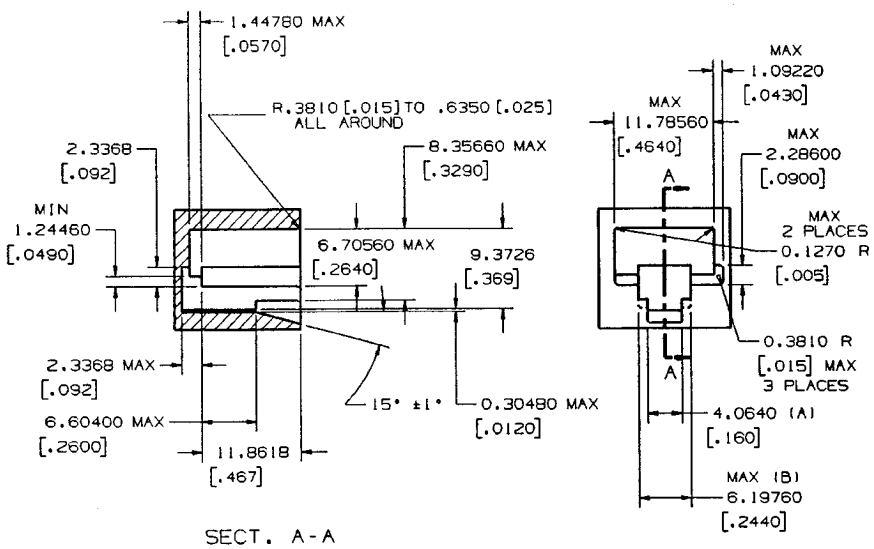

GO GAUGE

NOTES:

1. THE PLUG SHALL BE CAPABLE OF INSERTION AND LATCHING INTO THE GAUGE WITH 22.24 newtons [5 POUNDS] OR LESS INSERTION FORCE. PLUG LATCHING BAR SHALL BE DEPRESSED SO AS NOT TO INTERFERE WITH THE PLUG ENTRY. AFTER INSERTION AND LATCHING, PLUG SHALL BE CAPABLE OF REMOVAL, WITH THE LATCH DEPRESSED, WITH A REMOVAL FORCE OF 44.48 newtons [10 POUNDS] OR LESS APPLIED AT AN ADVANTAGEOUS ANGLE.
2. DIMENSIONS GIVEN TO FOUR DECIMAL PLACES SHALL BE WITHIN ±.0508mm [.002].
3. DIMENSIONS (A) AND (B) TO BE CENTRALLY LOCATED WITH RESPECT TO 11.78560mm [.4640] MAX. JACK OPENING WIDTH WITHIN ±.0254mm[.001].
4. DO NOT SCALE DRAWINGS FOR EXTERNAL CONFIGURATION.

FIGURE 68.500(i)(4)(i)-8 POSITION KEYED PLUG
MAXIMUM PLUG SIZE

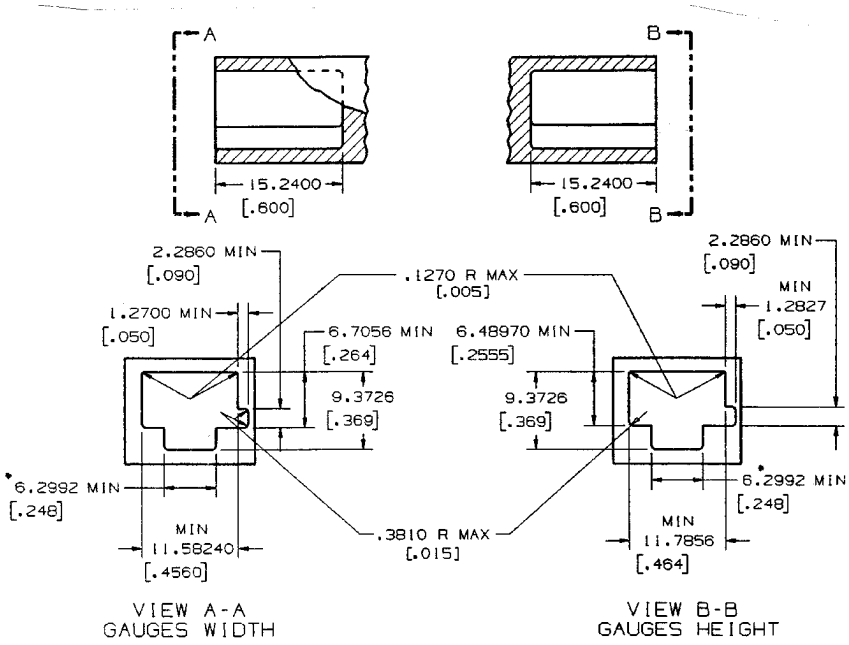

NO-GO GAUGE

NOTES:

1. THE PLUG SHALL NOT BE CAPABLE OF ENTERING THE GAUGE MORE THAN 1.7780mm [.070] BEYOND DATUM-A- (SEE FIGURE 68.500(i)(2)(i) WITH 8.90 newton [2.0 POUNDS] INSERTION FORCE.

2. NON-TOLERANCED DIMENSIONS GIVEN TO FOUR PLACES SHALL BE WITHIN ±.0508mm [.002] .

3. *6.2992mm [.248] DIMENSION TO BE CENTRALLY LOCATED WITH RESPECT TO 11.7856mm [.464] MINIMUM AND 11.58240mm [.4560] MINIMUM WITHIN ±.0508mm [.002] .

FIGURE 68.500(i)(5)(i)-8 POSITION KEYED PLUG, MINIMUM PLUG SIZE

(j) *Miniature 8-position keyed jack:*

Figure 68.500(j)(1)--View

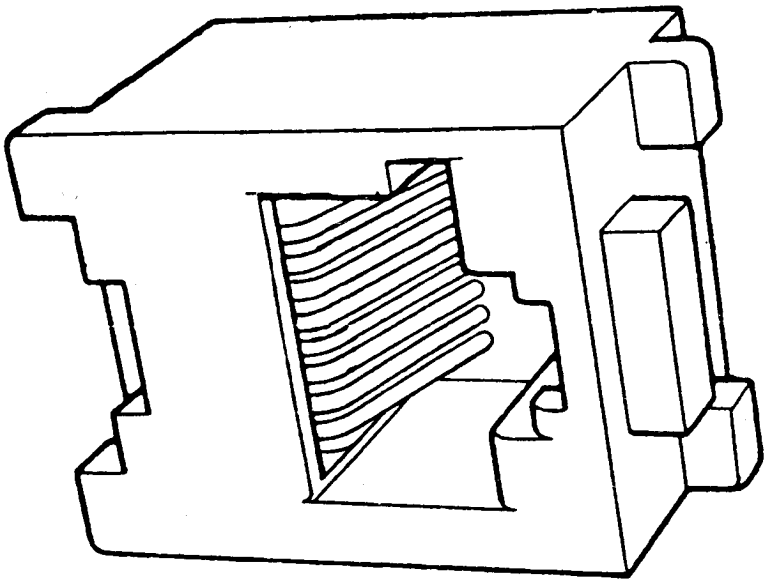

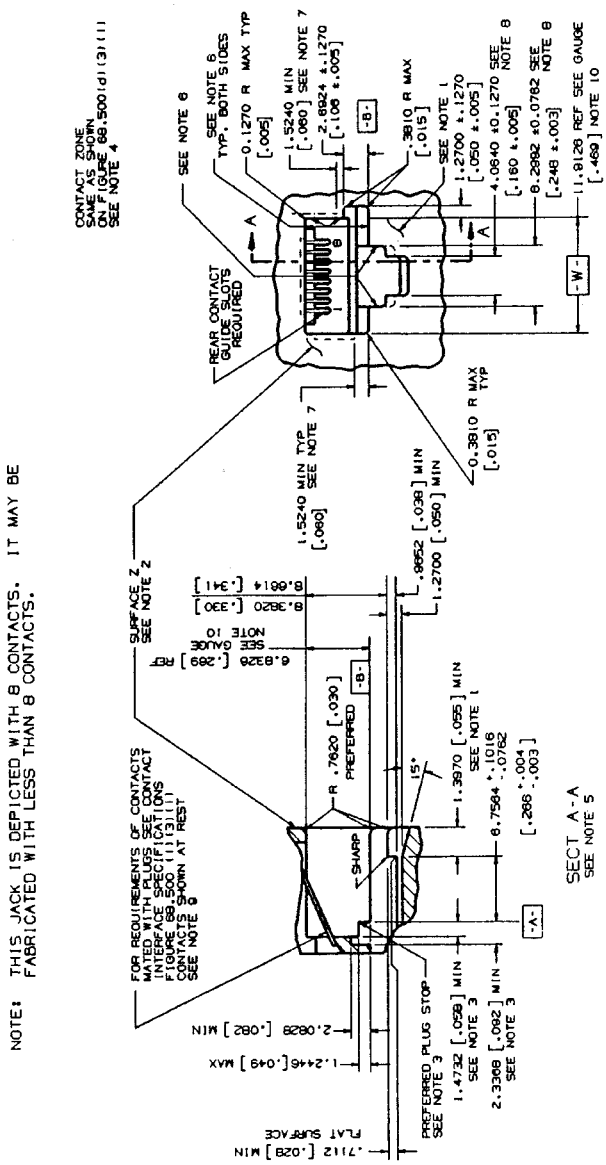

FIGURE 68.500(j)(2)(i)-8 POSITION KEYED JACK MECHANICAL SPECIFICATION

NOTES: (Notes apply to Figure 68.500(j)(2)(i))

1. Front surface projections beyond the 1.3970 mm (.055 inch) minimum shall be configured so as not to prevent finger access to the plug release catch (Reference Figure 68.500(i)(2)(ii) and 8-Position Plug, Mechanical Specifications). A catch length greater than 1.3970 mm (.055 inch) is beneficial in providing for greater breakout strength and improved guidance when interfacing with a 6-position plug.
2. Surface Z need not be planar or coincident with the surface under the plug release catch. Surface Z projections must not prevent insertion, latching, and unlatching of the standard 8-position plug on Figure 68.500(i)(2)(i).
3. The preferred plug stop surface is indicated. If some other internal feature is used as a plug stop, it must be located so that the axial movement of a latched plug is no greater than 1.1430 mm (.045) inch.
4. To prevent mistargeting between the plug and jack contacts, the jack contacts should be completely contained in their individual contact zones, (.7112 mm (.028 inch) max wide), where they extend into the jack openings. There is no location requirement for jack contacts below these zones (5.8420 mm (.230 inch) max), but adequate contact separation must be maintained to prevent electrical breakdown. These shaded contact zones should be centrally located, (include all locating tolerances), about the jack opening width 11.9126 mm (.469 inch) Ref, (Datum–W–). Contacts located outside of these zones may result in mistargeting between the jack and plug contacts.
5. All inside and outside corners in the plug cavity to be .3810 mm (.015 inch) radius max unless specified.
6. These surfaces shall have 0°15′ maximum draft.
7. Relief inside the dotted areas on both sides of the jack opening is permitted. The 6.8326 mm (.269 inch) Ref and 11.9126 mm (.469 inch) Ref Gauge Requirements must be maintained in each of the corners indicated, (Ref. 1.5240 mm (.060 inch) min), to assure proper plug/jack interface guidance.
8. 4.0640 mm (.160 inch) and 6.2992 mm (.248 inch) dimensions to be centrally located to jack opening width –W– within ±.1270 mm (.005).
9. The contact lengths shall be such that the contacts will always be contained inside the guide slots and the contacts must move freely in the slots so as not to restrain plug insertion or damage jack contacts.
10. Gauge Requirements:

GO: The jack shall be capable of accepting and 11.78560 × 6.70560 mm (.4640 × .2640 inch) gauge and the gauge shall be capable of being removed with a maximum force of 8.9 newtons (2.0 pounds).

NO GO: The jack shall not accept either a 12.03960 × 6.4516 mm (.4740 × .254 inch) horizontal width of opening gauge or a 6.95960 × 11.5824 mm (.2740 × .456 inch) vertical height of opening gauge. However, if the gauge is accepted, the force necessary to remove the gauge shall be minimum of .83 newtons (3.0 ounces).

Removal forces do not include forces contributed by contact springs nor shall external forces be applied to the jack that will affect these removal forces.

Gauges shall have a .7620 mm (.030 inch) radius on the nose and a .3810 mm (.015 inch) radius on all edges with clearance provided for contracts.

[41 FR 28699, July 12, 1976, as amended at 45 FR 52151, Aug. 6, 1980; 50 FR 27251, July 2, 1985; 58 FR 44907, Aug. 25, 1993]

§ 68.502 Configurations.

This section describes connection configurations which telephone subscribers may request their local telephone company to provide, in accordance with § 68.104 of these rules. In the absence of a request for a specific jack configuration, the telephone company shall install the standard jack depicted in § 68.502(a)(1). The listed configurations are for connections to be made by the telephone company to the standard jacks specified in this subpart. Plugs on registered terminal equipment and registered protective circuitry shall be wired so as to be compatible with the jack connections specified herein. The following nomenclature is used in this section:

T/R—Connections to the ''tip'' and ''ring'' wires of a telephone communications line, trunk, channel or facility.

A/A1—Connections to the ''hold'' functions of key telephone systems which use such connections. In such systems, the ''A'' lead corresponding to a particular telephone line is shorted to the ''A1'' lead when that line is placed in the ''off-hook'' state to permit proper operation of the ''hold'' functions associated with that line.

MB/MB1—Connections to leads implementing a make-busy feature where required. The MB lead is shorted by the terminal equipment to the MB1 lead when the corresponding telephone line is to be placed in an unavailable, or artificially busy condition.

Bridged—A bridged connection is a parallel connection.

Data—Data configurations are those which use jacks incorporating components to

limit signal power levels of data equipment. Data equipment with a maximum signal power output of −9 dBm may be connected to other than data configurations. *See* § 68.308 of these rules.

A ''USOC'' (Universal Service Ordering Code) is specified for each configuration. These USOCs are generic telephone company service ordering codes. If a telephone subscriber wishes to have the telephone company install a standard jack other than the one depicted in § 68.502(a)(1) below, he shall specify the appropriate USOC when requesting the installations.

(a) *Bridged configurations other than data; single line connections*—(1) *Bridged T/R; 6-position jack.*

ELECTRICAL NETWORK CONNECTION: Single line bridged tip and ring only—Conductors 1, 2, 5 and 6 are reserved for telephone company use.

UNIVERSAL SERVICE ORDER CODE (USOC): RJ11W for Portable Wall-Mounted equipment—RJ11C all others.

MECHANICAL ARRANGEMENT: Miniature 6 position jack.

TYPICAL USAGE: Single line non-key telephone, ancillary devices, PBXs and key telephone systems.

WIRING DIAGRAM:

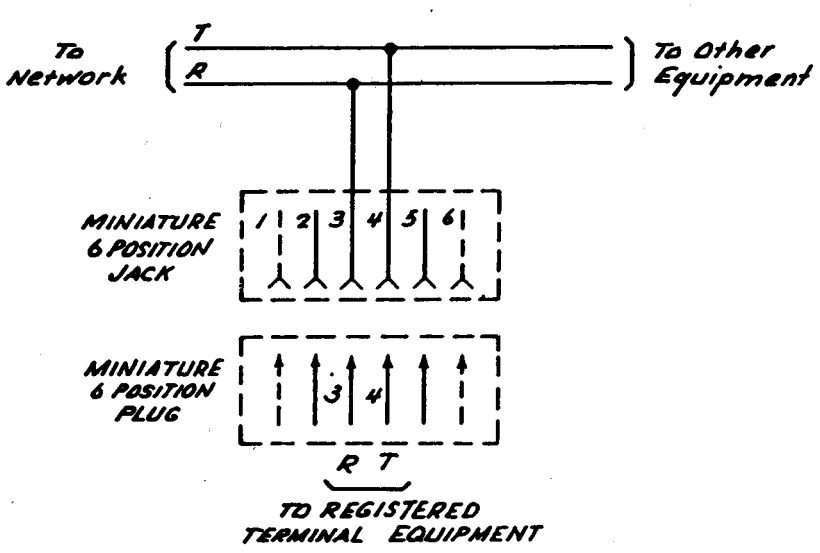

(2) *Bridged T/R; 3-position weatherproof jack.*

ELECTRICAL NETWORK CONNECTION: Single line bridged tip and ring.

UNIVERSAL SERVICE ORDER CODE: RJ15C.

MECHANICAL ARRANGEMENT: 3 position weatherproof jack.

TYPICAL USAGE: Providing telephone service to boats in marinas.

WIRING DIAGRAM:

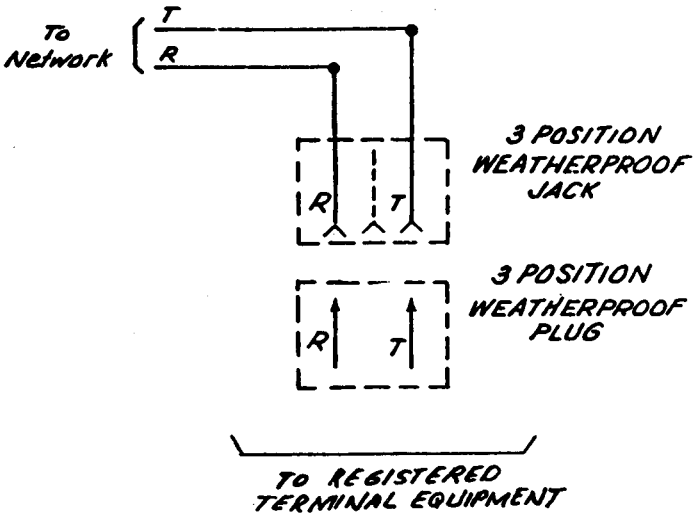

(3) *Bridged T/R with make-busy arrangement; 6-position jack.*

ELECTRICAL NETWORK CONNECTION: Single-line bridged tip and ring only with MB/MB1 leads. Conductors 2 and 5 are reserved for telephone company use.

UNIVERSAL SERVICE ORDER CODE (USOC): RJ18W for portable wall-mounted equipment—RJ18C for all others.

MECHANICAL ARRANGEMENT: Miniature 6-position jack.

TYPICAL USAGE: Single-line non-key telephone and ancillary devices connected directly to central office lines, where a make-busy requirement is needed.

WIRING DIAGRAM:

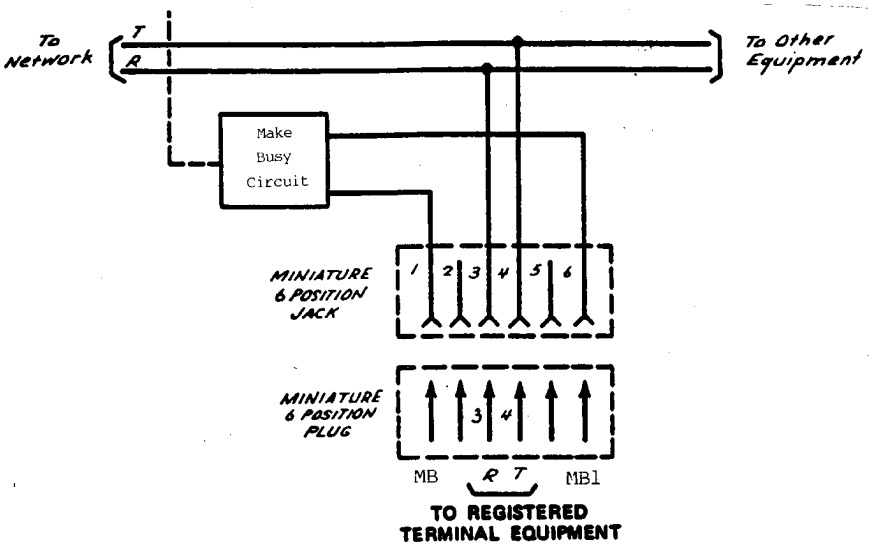

(b) *Series configurations*—(1) *Series T/R ahead of all station equipment; 8-position series jack.*

ELECTRICAL NETWORK CONNECTION: Series tip and ring ahead of all station equipment. Conductors 2, 3, 6 and 7 are reserved for telephone company use.

UNIVERSAL SERVICE ORDER CODE (USOC): RJ31X.

MECHANICAL ARRANGEMENT: Miniature 8 position series jack.

TYPICAL USAGE: Alarm reporting devices.

WIRING DIAGRAM:

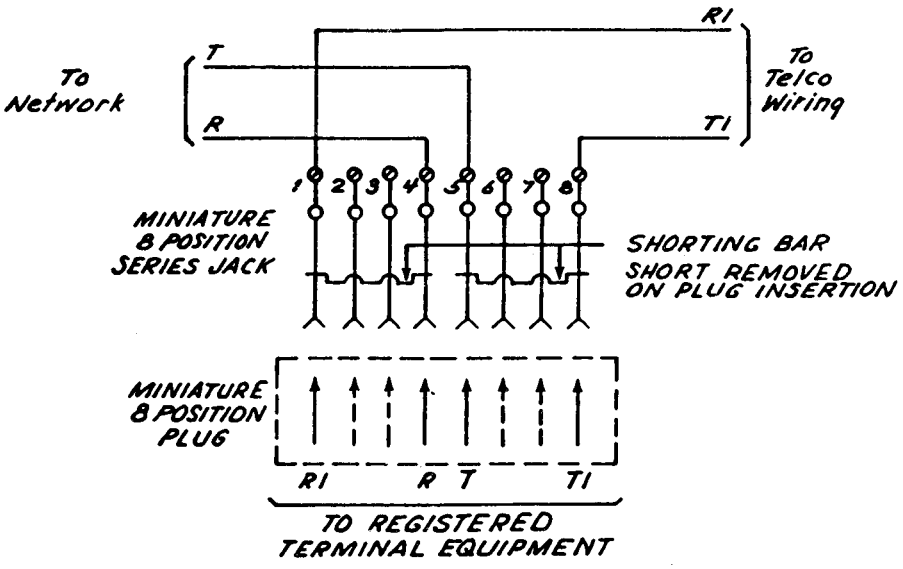

(2) [Reserved]

(3) *Series single-line tip and ring ahead of all station equipment; 8-position series jack equipped with continuity circuit.*

ELECTRICAL NETWORK CONNECTION: Series tip and ring ahead of all station equipment with continuity circuit. Conductors 3 and 6 are reserved for telephone company use.

UNIVERSAL SERVICE ORDER CODE (USOC): RJ38X.

MECHANICAL ARRANGEMENT: Miniature 8-position series jack.

TYPICAL USAGE: Alarm reporting devices.

WIRING DIAGRAM:

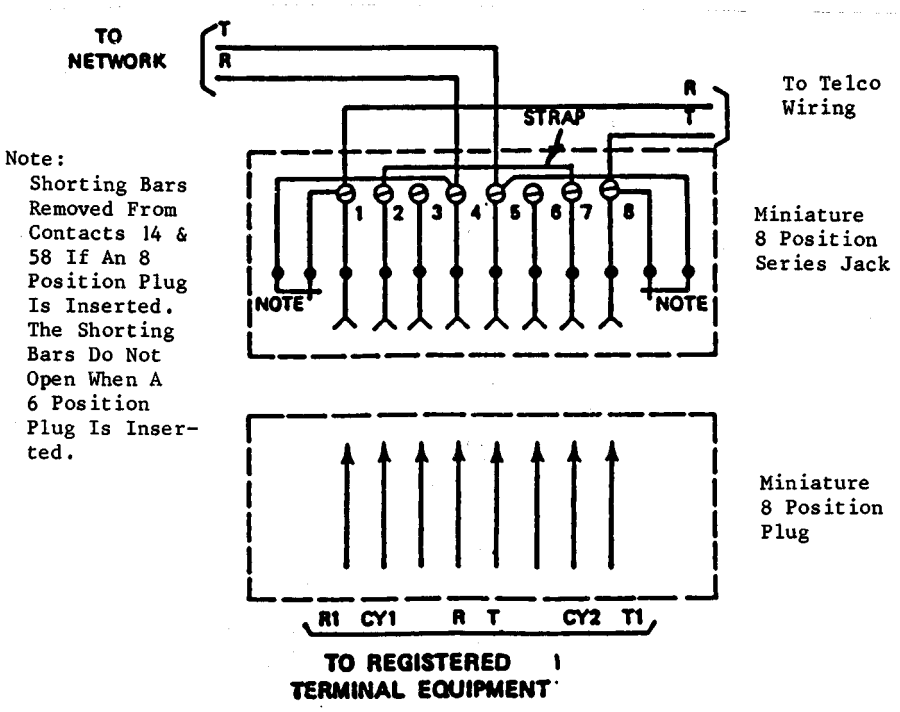

(c) *Two-line configurations*—(1) *Bridged T/R; 6-position jack.*

ELECTRICAL NETWORK CONNECTION: Two line bridged tip and ring.

UNIVERSAL SERVICE ORDER CODE (USOC): RJ14W for Portable Wall-Mounted equipment—RJ14C for all others.

MECHANICAL ARRANGEMENT: Miniature 6-position jack.

TYPICAL USAGE: Two line non-key telephone sets and ancillary devices.

WIRING DIAGRAM:

NOTE: The telephone company will wire the lines to the jack in the sequence designated by the customer.

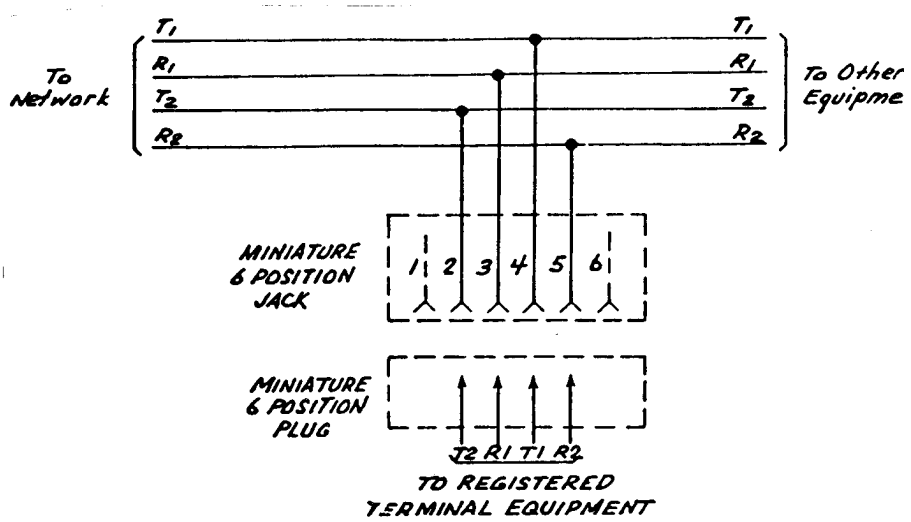

(d) *Multiple-line bridged configurations*—(1) *Up to 25 bridged T/R; 50-position jack.*

ELECTRICAL NETWORK CONNECTION: Multiple line bridged tip and ring.

UNIVERSAL SERVICE ORDER CODE (USOC): RJ21X.

MECHANICAL ARRANGEMENT: 50-position miniature ribbon jack.

TYPICAL USAGE: Traffic data recording systems, PBXs and key telephone systems.

WIRING DIAGRAM:

NOTE: At the time the jack is ordered the customer must specify the sequence in which the central office lines are to be connected to the jack. The telephone company will consecutively wire these lines to the jack as shown below without skipping any positions.

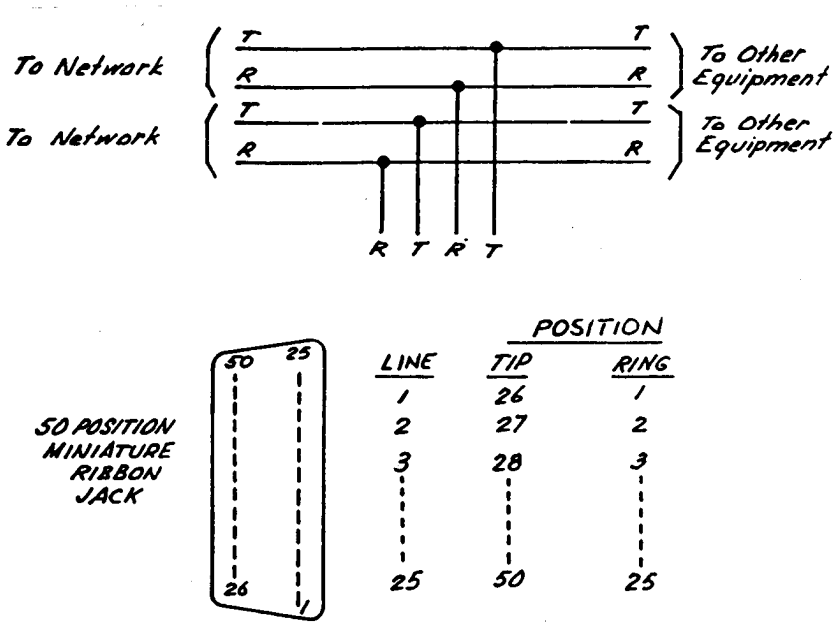

(2) *Bridged multiple-line 50-position T/R with make-busy arrangement.*

ELECTRICAL NETWORK CONNECTION: Multiple line bridge tip and ring with MB/MB1 leads for make-busy indication.

UNIVERSAL SERVICE ORDERING CODE (USOC): RJ2MB.

MECHANICAL ARRANGEMENT: 50-position miniature ribbon jack.

TYPICAL USAGE: 2–12 non-key telephone and ancillary devices connected directly to central office lines where a make-busy requirement is needed.

WIRING DIAGRAM:

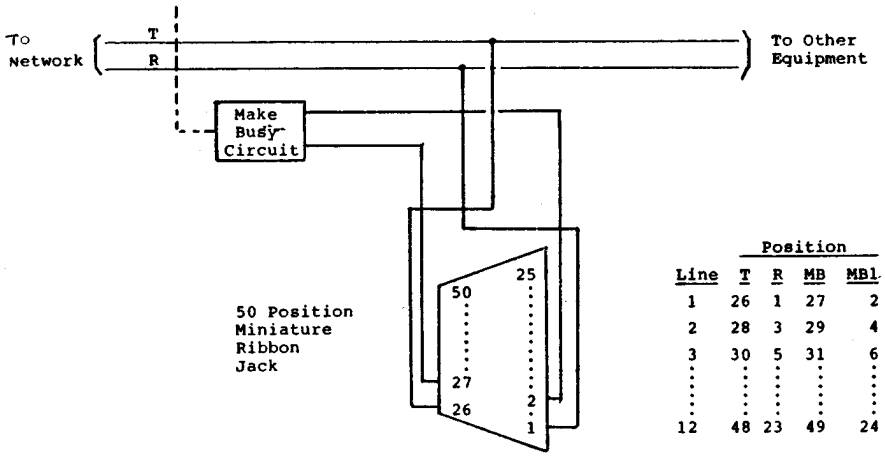

(e) *Data configurations.* There are two categories of data configurations, which may be implemented either on an 8 position keyed data jack, or on a 50 position unkeyed ribbon jack. These are: a ''universal'' configuration, which incorporates both a programming resistor (for programmed data signal power limiting) and an attenuator (for ''fixed-loss loop'' data signal power limiting), and a ''programmed'' configuration, which incorporates a programming resistor, but not an attenuator. The programming resistor is selected as follows:

The proper programming resistor (Rp) shall be selected by the telephone company at the time of installation based upon the loop loss of the telephone line to arrive at the optimum signal power level of −12 dBm at the central office. The table shown below gives the required signal power output for the programmed data equipment for each value of the programming resistor.

Programming Resistor (Rp)*	Programmed Data Equipment Signal Power Output**
short	0 dbm
150 ohms	−1 dbm
336 ohms	−2 dbm
569 ohms	−3 dbm
866 ohms	−4 dbm
1,240 ohms	−5 dbm
1,780 ohms	−6 dbm
2,520 ohms	−7 dbm
3,610 ohms	−8 dbm
5,490 ohms	−9 dbm
9,200 ohms	−10 dbm
19,800 ohms	−11 dbm
open	−12 dbm

*Tolerance of Rp is ± 1%.
**Tolerance of programmed data equipment signal power output is ± 1 dB.

The voltages impressed on resistor Rp by the data equipment shall be such as not to cause power dissipation in Rp in excess of 50 milliwatts.

The circuit shown below was used in calculating values of the programming resistors and may be useful in implementing the automatic control of signal power output in the programmed data equipment.

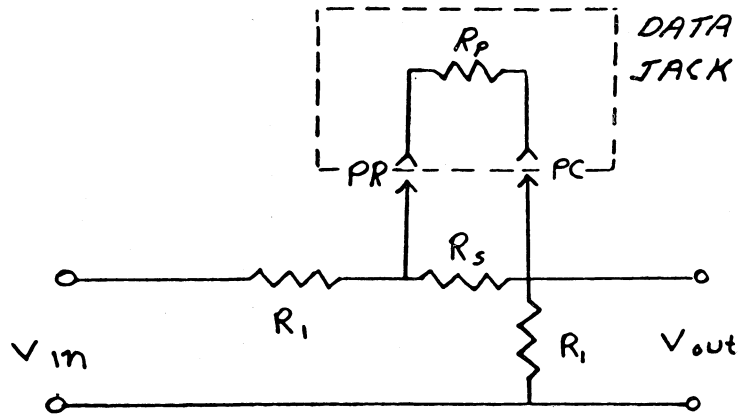

R1 is the source impedance for the input signal Vin, and also the terminating impedance of the load. R_S is a series resistance, on which the computation of the programming resistor Rp is based. The table of values of Rp is derived for R_1=600 ohms; R_S=3600 ohms.

In ''universal'' configurations, the proper attenuator shall be installed or adjusted by the telephone company at the time of installation, based upon the loop loss of the telephone line, to arrive at the optimum power level of −12 dBm at the central office, with a data device maximum signal power level of −4 dBm.

The switch which is incorporated in ''universal'' configurations shall be operated to the position appropriate for the type of data equipment which is connected.

(1) *Bridged T/R; 8-position keyed data jack—Universal.*

ELECTRICAL NETWORK CONNECTION: Single line bridged tip and ring.

UNIVERSAL SERVICE ORDER CODE: RJ41S.

MECHANICAL ARRANGEMENT: Single miniature 8-position keyed jack for surface mounting.

TYPICAL USAGE: Universal jack for fixed loss loop (FLL) or programmed (P) types of data equipment.

WIRING DIAGRAM:

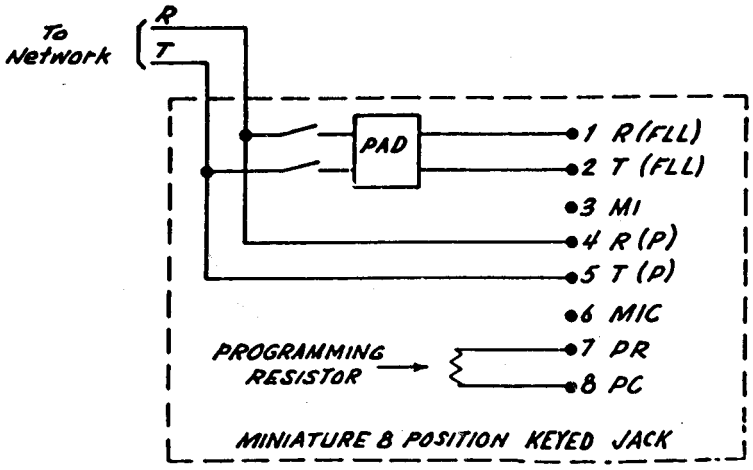

(2) *Bridged T/R; 8-position keyed data jack—Programmed.*

ELECTRICAL NETWORK CONNECTION: Single line bridged tip and ring.

UNIVERSAL SERVICE ORDER CODE: RJ45S.

MECHANICAL ARRANGEMENT: Single miniature 8-position keyed jack for surface mounting.

TYPICAL USAGE: Programmed data equipment.

WIRING DIAGRAM:

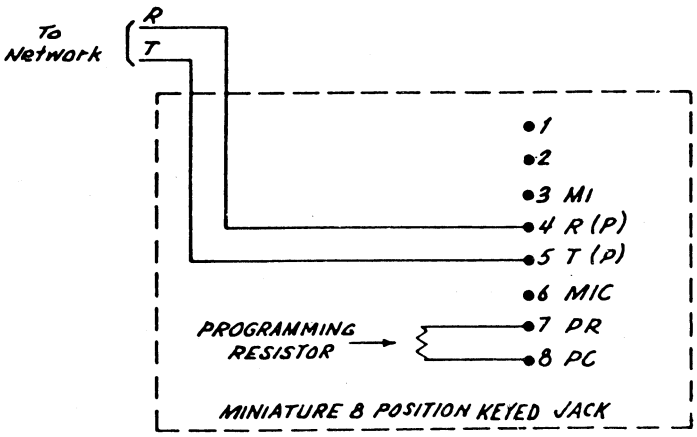

(3) *Multiple bridged T/R; 8-position keyed data jack—Universal.*

ELECTRICAL NETWORK CONNECTION: Multiple line bridged tip and ring.
UNIVERSAL SERVICE ORDER CODE: RJ41M.
MECHANICAL ARRANGEMENT: Up to 8 miniature 8-position keyed jacks in multiple mounting arrangement.
TYPICAL USAGE: Multiple installations of fixed loss loop or programmed types of data equipment.
WIRING DIAGRAM: Multiple arrangement of § 68.502(e)(1).

(4) *Multiple bridged T/R; 8-position keyed data jack—Programmed.*

ELECTRICAL NETWORK CONNECTION: Multiple line bridged tip and ring.
UNIVERSAL SERVICE ORDER CODE: RJ45M.
MECHANICAL ARRANGEMENT: Up to 8 miniature 8-position keyed jacks in multiple mounting arrangement.
TYPICAL USAGE: Multiple installations of programmed types of data equipment.
WIRING DIAGRAM: Multiple arrangement of § 68.502(e)(2).

(5) *Bridged T/R; 50-position ribbon jack—Universal.*

ELECTRICAL NETWORK CONNECTION: Single or multiple line bridged tip and ring.
UNIVERSAL SERVICE ORDER CODE: RJ26X.
MECHANICAL ARRANGEMENT: 50-position miniature ribbon jack.
TYPICAL USAGE: Universal jack for fixed loss loop (FLL) or programmed (P) types of data equipment.
WIRING DIAGRAM:

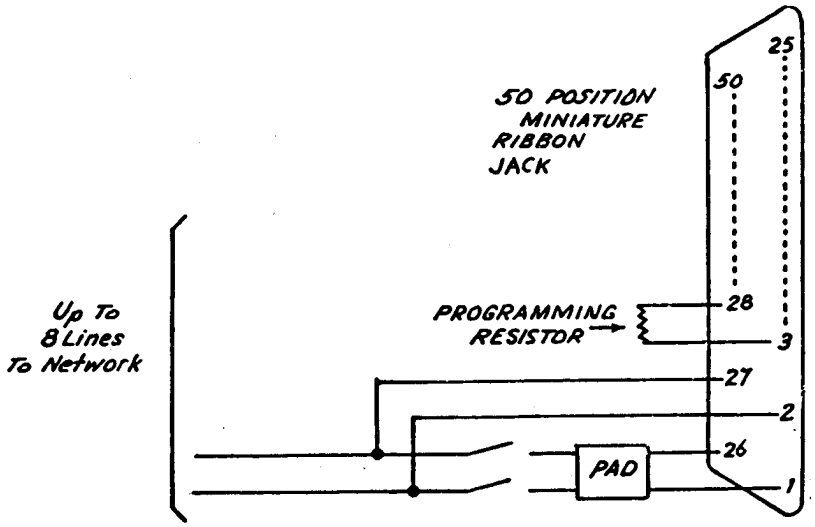

Line	Position					
	FLL		P		PR	PC
	T	R	T	R		
1	26	1	27	2	28	3
2	29	4	30	5	31	6
3	32	7	33	8	34	9
4	35	10	36	11	37	12
5	38	13	39	14	40	15
6	41	16	42	17	43	18
7	44	19	45	20	46	21
8	47	22	48	23	49	24

NOTE: At the time the jack is ordered, the customer shall specify the number of and sequence of central office lines to be connected to the jack. The telephone company will consecutively wire these lines to the jack in accordance with the table above, without skipping any positions.

(6) *Bridged T/R; 50-position ribbon jack—Programmed.*

ELECTRICAL NETWORK CONNECTION: Single or multiple line bridged tip and ring.
UNIVERSAL SERVICE ORDER CODE: RJ27X.
MECHANICAL ARRANGEMENT: 50-position miniature ribbon jack.
TYPICAL USAGE: Programmed jack for programmed (P) types of data equipment.
WIRING DIAGRAM:

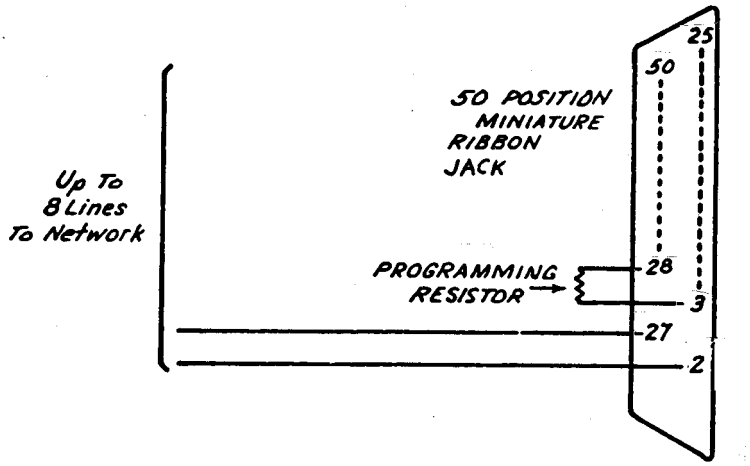

Line	Position			
	P		PR	PC
	T	R		
1	27	2	28	3
2	30	5	31	6
3	33	8	34	9
4	36	11	37	12
5	39	14	40	15
6	42	17	43	18
7	45	20	46	21
8	48	23	49	24

NOTE: At the time the jack is ordered, the customer shall specify the number of and sequence of central office lines to be connected to the jack. The telephone company will consecutively wire these lines to the jack in accordance with the table above, without skipping any positions.

(f) *Multiple line series configurations*—(1) *Up to eight (8) position jacks.* Multiple series jacks in this category consist of multiple arrangements of configurations specified in paragraph (b) of this section, in a multiple mounting arrangement. Such multiple arrangements may be ordered as a unit under the following:

UNIVERSAL SERVICE ORDER CODE: RJ31M: Multiple series T/R ahead of all station equipment (reference § 68.502(b)(1)).

[41 FR 28699, July 12, 1976, as amended at 44 FR 7959, Feb. 8, 1979; 46 FR 38516, July 28, 1981; 50 FR 47549, Nov. 19, 1985; 50 FR 49930, Dec. 6, 1985; 51 FR 951, Jan. 9, 1986]

§ 68.504 Universal patent license agreement.

UNIVERSAL PATENT LICENSE AGREEMENT

Effective as of ——— WESTERN ELECTRIC COMPANY, INCORPORATED, a New York corporation (''WESTERN''), having an office at 222 Broadway, New York, New York 10038, and ——————— (''the CORPORATION''), having an office at ——————— agree as follows:

ARTICLE I—DEFINITIONS

1.01 Terms in this agreement (other than technical terms, names of parties, companies and Article headings) which are in capital letters shall have the meanings specified in the General Definitions Appendix, and technical terms in this agreement which are in capital letters shall have the meanings specified in the Technical Definitions Appendix.

ARTICLE II—GRANTS OF LICENSES AND IMMUNITIES

2.01 WESTERN grants to the CORPORATION under WESTERN'S PATENTS nonexclusive licenses for products of the following kinds:

———————————————————

———————————————————

———————————————————

2.02 All licenses herein granted shall commence on the effective date hereof and, except as provided in Article V and notwithstanding the expiration of the FIVE YEAR PERIOD, shall continue for the entire terms that the patents under which they are granted are in force or for that part of such terms for which WESTERN has the right to grant such licenses.

2.03 WESTERN grants under all patents issued in countries other than the United States and owned or controlled by AMERICAN TELEPHONE AND TELEGRAPH COMPANY, a New York corporation (''AT&T''), WESTERN or their SUBSIDARIES, royalty-free immunity relating to the sale, lease or use in, or the importation into, such other countries of LICENSED PRODUCTS, and maintenance parts therefor, manufactured under the licenses granted under WESTERN'S PATENTS: provided, however, that nothing in this section 2.03 shall relieve the CORPORATION of its obligation to pay any royalty which may be predicated upon such manufacture of any such LICENSED PRODUCT or part, whether or not the first sale, lease or use thereof occurs outside of the United States.

2.04 The licenses granted for LICENSED PRODUCTS are licenses to make, have made, use, lease and sell such LICENSED PRODUCTS. Such licenses include the rights to maintain LICENSED PRODUCTS, to practice methods and processes involved in the use of LICENSED PRODUCTS and to make and have made, to use and have used, and to maintain machines, tools, materials and other instrumentalities, and to use and have used methods and processes, insofar as such machines, tools, materials, other instrumentalities, methods and processes are involved in or incidental to the development, manufacture, installation, testing or repair of LICENSED PRODUCTS.

2.05 The grant of each license to the CORPORATION includes the right to grant sublicenses within the scope of such license to its SUBSIDIARIES. Such right may be exercised at any time prior to termination or cancellation of the corresponding license under the provisions of Article V. Any such sublicenses granted to any present SUBSIDIARY may be made effective, retroactively, as of the effective date hereof, and any such sublicenses granted to any future SUBSIDIARY may be made effective, retroactively, as of the date such company became a SUBSIDIARY.

2.06 It is recognized that WESTERN or any of its ASSOCIATED COMPANIES may have entered into or may hereafter enter into a contract with a national government to do development work financed by such government and may be required under such contract (either unconditionally or by reason of any action or inaction thereunder) to assign to such government its rights to grant, or may now or hereafter be restrained by such government from granting, licenses or immunities to others than its ASSOCIATED COMPANIES under patents for inventions arising out of such work or covered by such contract. The resulting inability of WESTERN to grant the licenses or immunities purported to be granted by it under patents for such inventions shall not be considered to be a breach of this agreement, if:

(i) Such contract is for the benefit of such government's military or national defense establishment or the Energy Research and Development Administration of the United States Government or the National Aeronautics and Space Administration of the United States Government, or

(ii) In cases other than (i), such contract is with the United States Government or any agency of and within such Government, and any such requirement or restraint is pursuant to a statute or officially promulgated regulation of such Government or agency applicable to such contract;

provided, however, that

(iii) WESTERN (or, if an ASSOCIATED COMPANY thereof has entered into such contract, such ASSOCIATED COMPANY) shall exert its best efforts to enable WESTERN to grant the licenses or immunities herein purported to be granted by it under such patents; and

(iv) Within ninety (90) days after the filing of any application for any such patent, WESTERN shall give written notice to the other party identifying such application by country, number and date of filing.

For the purposes of this section 2.06, AT&T, WESTERN and their ASSOCIATED COMPANIES shall all be deemed to be ASSOCIATED COMPANIES of one another.

ARTICLE III—ROYALTY

3.01 The CORPORATION shall pay to WESTERN royalty, at the applicable rate hereinafter specified, on each LICENSED PRODUCT, and maintenance part therefor, which is a ROYALTY-BEARING PRODUCT, and

(i) Which is sold, leased or put into use by the CORPORATION or any of its SUBSIDIARIES while any license acquired hereunder by the CORPORATION with respect to such ROYALTY-BEARING PRODUCT shall remain in force, or

(ii) Which is made by or for the CORPORATION or any of its SUBSIDIARIES while any such license shall remain in force and is thereafter sold, leased or put into use by the CORPORATION or any of its SUBSIDIARIES,

whether or not such SUBSIDIARIES are sublicensed pursuant to section 2.05, such royalty rate to be applied, except as provided in section 3.05, to the NET SELLING PRICE of such ROYALTY-BEARING PRODUCT if sold for a separate consideration payable wholly in money and in all other cases to the FAIR MARKET VALUE thereof. The royalty rates applicable to LICENSED PRODUCTS of the kinds specified in section 2.01, and maintenance parts therefor, are as follows:

(iii) _____

_____

3.02 If a LICENSED PRODUCT is a ROYALTY-BEARING PRODUCT solely on account of one or a limited number of WESTERN'S PATENTS, the CORPORATION may elect to reduce the amount of royalty otherwise payable hereunder on said LICENSED PRODUCT by a royalty reduction percentage, and as of an effective date, established by WESTERN. Upon written request from the CORPORATION identifying the LICENSED PRODUCT and each relevant patent, WESTERN will inform the CORPORATION of the royalty reduction percentage applicable in respect of said LICENSED PRODUCT and patent or patents and the effective date thereof.

3.03 A LICENSED PRODUCT, or maintenance part therefor, which is made and sold by the CORPORATION or any of its SUBSIDIARIES and which is a ROYALTY-BEARING PRODUCT hereunder on account of one or more of WESTERN'S PATENTS, may be treated by the CORPORATION as not licensed and not subject to royalty hereunder if all of the following conditions are met:

(i) The purchaser is licensed under the same patent or patents, pursuant to another agreement, to have said LICENSED PRODUCT or part made;

(ii) The purchaser expressly advises the CORPORATION or its SUBSIDIARY, whichever effects the making and sale, in writing at or prior to (but in no event later than) the time of such sale that, in purchasing said LICENSED PRODUCT or part, it is exercising its own license or licenses under said patent or patents to have said LICENSED PRODUCT or part made; and

(iii) The CORPORATION retains such written advice and makes it available to WESTERN at the latter's request.

3.04 Only one royalty shall be payable hereunder in respect of any ROYALTY-BEARING PRODUCT. Royalty shall accrue hereunder on any LICENSED PRODUCT, or maintenance part therefor, upon its first becoming a ROYALTY-BEARING PRODUCT, and the royalty thereon shall become payable in accordance with the provisions of this Article III upon the first sale, lease or putting into use thereof.

3.05 If any sale of a ROYALTY-BEARING PRODUCT shall be made by the CORPORATION on a SUBSIDIARY thereof to:

(i) Any company of which the CORPORATION is a SUBSIDIARY at the time of such sale, or

(ii) The CORPORATION or a SUBSIDIARY thereof or any other SUBSIDIARY of a company of which the CORPORATION is a SUBSIDIARY at the time of such sale.

royalty payable hereunder shall be computed on the FAIR MARKET VALUE of such ROYALTY-BEARING PRODUCT,

ARTICLE IV—REPORTS AND PAYMENTS

4.01 The CORPORATION shall keep full, clear and accurate records with respect to ROYALTY-BEARING PRODUCTS. WESTERN shall have the right through its accredited auditing representatives to make an examination and audit, during normal business hours, not more frequently than annually, of all such records and such other records and accounts as may under recognized accounting practices contain information bearing upon the amount of royalty payable to it under this agreement. Prompt adjustment shall be made by the proper party to compensate for any errors or omissions disclosed by such examination or audit. Neither such right to examine and audit nor the right to receive such adjustment shall be affected by any statement to the contrary, appearing on checks or otherwise, unless such statement appears in a letter, signed by the party having such right and delivered to the other party, expressly waiving such right.[1]

4.02 (a) Within sixty (60) days after the end of each semiannual period ending on June 30th or December 31st, commencing with the semiannial period during which this agreement first becomes effective, the CORPORATION shall furnish to WESTERN a statement, in form acceptable to WESTERN, certified by a responsible official of the CORPORATION:

(i) Showing all ROYALTY-BEARING PRODUCTS, by kinds of LICENSED PRODUCTS, which were sold, leased or put into use during such semiannual period, the NET SELLING PRICES of such ROYALTY-BEARING PRODUCTS or (where royalty is based on FAIR MARKET VALUES) the FAIR MARKET VALUES thereof and the amount of royalty payable thereon (or if no such ROYALTY-BEARING PRODUCT has been so sold, leased or put into use, showing that fact);

(ii) Identifying, if royalty is reduced under provisions of section 3.02, each LICENSED PRODUCT by its type and the patent or patents involved in such royalty reduction;

[1] If licensee insists on a non-Western auditor, third line, insert, after ''representatives'', -or, at the election of the CORPORATION, through a firm of certified public accountants proposed by WESTERN and accepted by the CORPORATION-.

(iii) Showing, by purchasers and kinds of LICENSED PRODUCTS, the monetary totals of the sales, to each purchaser exercising its own ''to have made'' license or licenses, of LICENSED PRODUCTS and maintenance parts in transactions of the character described in section 3.03; and

(iv) Identifying all transactions of the character described in section 3.05.

(b) Within such sixty (60) days the CORPORATION shall, irrespective of its own business and accounting methods, pay to WESTERN the royalties payable for such semiannual period.

(c) Notwithstanding the provisions of section 6.03(a)(v), the CORPORATION shall furnish whatever additional information WESTERN may reasonably prescribe from time to time to enable WESTERN to ascertain which LICENSED PRODUCTS (and maintenance parts therefor) sold, leased or put into use by the CORPORATION or any of its SUBSIDIARIES are subject to the payment of royalty to WESTERN, and the amount of royalty payable thereon.

4.03 Royalty payments provided for in this agreement shall, when overdue, bear interest at an annual rate of one percent (1%) over the prime rate or successive prime rates in effect in New York City during delinquency.

4.04 Payment to WESTERN shall be made in United States dollars to WESTERN'S Treasury Organization at 222 Broadway, New York, New York 10038, or at such changed address as WESTERN shall have specified by written notice. If any royalty for any semiannual period referred to in section 4.02 is computed in other currency, conversion to United States dollars shall be at the prevailing rate for bank cable transfers on New York City as quoted for the last day of such semiannual period by leading banks dealing in the New York City foreign exchange market.

ARTICLE V—TERMINATION, CANCELLATION AND SURRENDER

5.01 (a) If the CORPORATION shall fail to fulfill one or more of its obligations under ARTICLES III or IV, WESTERN may, upon election and in addition to any other remedies that it may have, at any time terminate all licenses and rights granted to the CORPORATION hereunder, by not less than six (6) months' written notice to the CORPORATION specifying any such breach, unless within the period of such notice all breaches specified therein shall have been remedied.

(b) Termination by WESTERN of licenses and rights granted to the CORPORATION shall terminate the obligations of the CORPORATION under the provisions of Articles III and IV relating to such terminated licenses and rights, except such obligations as to ROYALTY-BEARING PRODUCTS made, sold, leased or put into use prior to such termination.

5.02 By written notice to WESTERN, the CORPORATION may cancel the licenses for any specified products granted hereunder to it under WESTERN'S PATENTS. Such cancellation shall be effective as of the date of giving said notice but shall not relieve the CORPORATION of its obligation to pay accrued royalties with respect to such specified products.

5.03 By written notice to WESTERN, specifying any of WESTERN'S PATENTS by number and date of issuance, the CORPORATION may surrender and terminate all licenses and rights granted to it under such specified patent or patents or under any specified invention or inventions thereof. Such surrender and termination shall be effective as of a date specified in said notice which shall not be more than six (6) months prior to the date of giving said notice. As of said effective date, such specified patent or patents or invention or inventions shall cease to be among, or among the inventions of, WESTERN'S PATENTS for the purposes of this agreement without affecting obligations in respect of royalties accrued prior to said effective date.

5.04 (a) Every sublicense granted by the CORPORATION shall terminate with termination or cancellation of its corresponding license.

(b) Any sublicenses granted shall terminate if and when the grantee thereof ceases to be a SUBSIDIARY of the CORPORATION. Each LICENSED PRODUCT and each maintenance part, made by or for a SUBSIDIARY of the CORPORATION, and on which royalty has accrued but which remains not sold, leased or put into use at the time such SUBSIDIARY ceases to be a SUBSIDIARY of the CORPORATION, shall be deemed to have been put into use by such SUBSIDIARY immediately prior to such time at the place said LICENSED PRODUCT or part is then located.

5.05 Licenses, immunities and rights with respect to each LICENSED PRODUCT, and each maintenance part, made, sold, leased or put into use prior to any termination or cancellation under the provisions of this Article V shall survive such termination or cancellation.

ARTICLE VI—MISCELLANEOUS PROVISIONS

6.01 (a) WESTERN shall, upon written request from the CORPORATION sufficiently identifying any patent by country, number and date of issuance, inform the CORPORATION as to the extent to which any such patent is subject to the licenses, immunities and rights granted to the CORPORATION.

(b) If such licenses, immunities or rights under any such patent are restricted in scope, copies of all pertinent provisions of

any contract (other than provisions of a contract with a government to the extent that disclosure thereof is prohibited under the government's laws or regulations) creating such restrictions shall, upon request, be furnished to the CORPORATION.

6.02 Upon written request from the CORPORATION, WESTERN shall inform the CORPORATION which of WESTERN'S PATENTS cover inventions under which the United States Government holds a royalty-free license.

6.03 (a) Nothing contained in this agreement shall be construed as:

(i) Requiring the filing of any patent application, the securing of any patent or the maintaining of any patent in force; or

(ii) A warranty or representation by WESTERN as to the validity or scope of any patent; or

(iii) A warranty or representation that any manufacture, sale, lease, use or importation will be free from infringement of patents other than those under which and to the extent to which licenses or immunities are in force hereunder; or

(iv) An agreement to bring or prosecute actions or suits against third parties for infringement; or

(v) An obligation to furnish any manufacturing or technical information or assistance; or

(vi) Conferring any right to use, in advertising, publicity or otherwise, any name, trade name or trademark, or any contraction, abbreviation or simulation thereof; or

(vii) Conferring by implication, estoppel or otherwise upon the CORPORATION any license or other right under any patent, except the licenses and rights expressly granted to the CORPORATION; or

(viii) An obligation upon WESTERN to make any determination as to the applicability of any patent to any product of the CORPORATION or any of its SUBSIDIARIES; or

(ix) A release for any infringement prior to the effective date hereof.

(b) Neither WESTERN nor AT&T makes any representations, extends any warranties of any kind or assumes any responsibility whatever with respect to the manufacture, sale, lease, use or importation of any LICENSED PRODUCT, or part therefor, by the CORPORATION, any of its SUBSIDIARIES, or any direct or indirect supplier or vendee or other transferee of any such company, other than the licenses, immunities and rights expressly herein granted.

6.04 Neither this agreement nor any licenses or rights hereunder, in whole or in part, shall been assignable or otherwise transferable.

6.05 Any notice, request or information shall be deemed to be sufficiently given when sent by registered mail addressed to the addressee at its office above specified (and when addressed to WESTERN to the attention of its Patent Licensing Organization) and any royalty statement shall be deemed to be sufficiently furnished when sent by registered mail addressed to WESTERN'S Treasury Organization at 222 Broadway, New York, New York 10038, or at such changed address as the addressee shall have specified by written notice.

6.06 This agreement sets forth the entire agreement and understanding between the parties as to the subject matter hereof and merges all prior discussions between them, and neither of the parties shall be bound by any conditions, definitions, warranties, understandings or representations with respect to such subject matter other than as expressly provided herein, or in any prior existing written agreement between the parties, or as duly set forth on or subsequent to the effective date hereof in writing and signed by a proper and duly authorized representative of the party to be bound thereby.

6.07 The construction and performance of this agreement shall be governed by the law of the State of New York.

IN WITNESS WHEREOF, each of the parties has caused this agreement to be executed in duplicate originals by its duly authorized representatives on the respective dates entered below.

WESTERN ELECTRIC COMPANY, INCORPORATED

By _____

Director of Patent Licensing

_____

Date

[SEAL]

Attest:

_____

Secretary

By _____

Title _____

_____

Date

[SEAL]

Attest:

_____

Secretary

GENERAL DEFINITIONS APPENDIX

FAIR MARKET VALUE means the NET SELLING PRICE which the CORPORATION or any of its SUBSIDIARIES, whichever effects the sale, lease or use of the product or maintenance part, would realize from an unaffiliated buyer in an arm's length sale of an identical product or maintenance part in the same quantity and at the same time and place as such sale, lease or use.

FIVE YEAR PERIOD means the period commencing on the effective date of this agreement and having a duration of five years.

LICENSED PRODUCT means:

(i) Any product as such, or

(ii) Any product which is any specified combination, of the kinds listed in section 2.01 of this agreement. Although the term does not mean, and although licenses are not granted for any other combination, a LICENSED PRODUCT

(iii) Shall not lose its status as such on account of, and

(iv) Shall not cause an unlicensed combination to infringe WESTERN'S PATENTS solely on account of, such LICENSED PRODUCT being made, sold, leased or put into use as part of an unlicensed combination.

NET SELLING PRICE means the gross selling price of the ROYALTY-BEARING PRODUCT in the form in which it is sold, whether or not assembled (and without excluding therefrom any components or subassemblies thereof, whatever their origin and whether or not patent impacted), less the following items but only insofar as they pertain to the sale of such ROYALTY-BEARING PRODUCT by the CORPORATION or any of its SUBSIDIARIES and are included in such gross selling price:

(i) Usual trade discounts actually allowed (other than cash discounts, advertising allowances, or fees or commissions to any employees of the CORPORATION, a SUBSIDIARY of the CORPORATION, a company of which the CORPORATION is a SUBSIDIARY at the time of the sale, or any other SUBSIDIARY of a company of which the CORPORATION is a SUBSIDIARY at the time of such sale);

(ii) Packing costs;

(iii) Import, export, excise and sales taxes, and customs duties;

(iv) Costs of insurance and transportation from the place of manufacture to the customer's premises or point of installation;

(v) Costs of installation at the place of use; and

(vi) Costs of special engineering services not incident to the design or manufacture of the ROYALTY-BEARING PRODUCT.

ROYALTY-BEARING PRODUCT means any LICENSED PRODUCT, and any maintenance part therefor,

(i) Which upon manufacture includes, or the manufacture of which employs, any invention of any of WESTERN'S PATENTS in force at the time and place of such manufacture, or

(ii) Which includes when sold, leased or put into use, or the use of which employs, any invention of any of WESTERN'S PATENTS in force at the time and place of such sale, lease or use,

other than

(iii) Inventions under which the United States Government holds a royalty-free license if such LICENSED PRODUCT or part is contracted for, directly or indirectly, by the United States Government, or by another national government with funds derived through the Military Assistance Program or otherwise through the United States Government, and

(iv) Inventions employed in the manufacture of, or included in, such LICENSED PRODUCT or any original part thereof, or such maintenance part therefor or any original part thereof, by a direct or indirect supplier of the CORPORATION or any of its SUBSIDIARIES, but only to the extent such supplier has exercised its own licenses granted by WESTERN under patents for such inventions to so employ or include said inventions.

SUBSIDIARY means a company the majority of whose stock entitled to vote for election of directors is now or hereafter controlled by the parent company either directly or indirectly, but any such company shall be deemed to be a SUBSIDIARY only so long as such control exists.

WESTERN'S PATENTS means all patents issued at any time in the United States for:

(i) Inventions made prior to the termination of the FIVE YEAR PERIOD and owned or controlled at any time during the FIVE YEAR PERIOD by AT&T, WESTERN or any of their SUBSIDIARIES,

(ii) Inventions made during the FIVE YEAR PERIOD, solely or jointly with anyone, and in the course of their employment by employees of any such company who are employed to do research, development or other inventive work, and

(iii) Any other inventions made prior to the termination of the FIVE YEAR PERIOD, with respect to which and to the extent to which any such company shall at any time during the FIVE YEAR PERIOD have the right to grant the licenses and rights which are herein granted by WESTERN:

provided, however, that said patents do not include those issued for inventions made by employees of any SUBSIDIARY of WESTERN or AT&T exclusively engaged in the performance of contracts with the Energy Research and Development Administration of the United States.

TECHNICAL DEFINITIONS APPENDIX

BILATERAL PATENT LICENSE AGREEMENT

Effective as of ——— WESTERN ELECTRIC COMPANY, INCORPORATED, a New York corporation (''WESTERN''), having an office at 222 Broadway, New York, New York

10038, and ———————— (''the CORPORATION'') having an office at ———————— agree as follows:

ARTICLE I—DEFINITIONS

1.01 Terms in this agreement (other than technical terms, names of parties, companies and Article headings) which are in capital letters shall have the meanings specified in the General Definitions Appendix, and technical terms in this agreement which are in capital letters shall have the meanings specified in the Technical Definitions Appendix.

ARTICLE II—GRANTS OF LICENSES AND IMMUNITIES

2.01 WESTERN grants to the CORPORATION under WESTERN'S PATENTS nonexclusive licenses for products of the following kinds:

2.02 The CORPORATION grants to WESTERN and to AMERICAN TELEPHONE AND TELEGRAPH COMPANY, a New York corporation (''AT&T''), severally, under the CORPORATION'S PATENTS nonexclusive royalty-free licenses for products of the following kinds:

———————————————————————

———————————————————————

———————————————————————

2.03 All licenses herein granted shall commence on the effective date hereof and, except as provided in Article VI and notwithstanding the expiration of the FIVE YEAR PERIOD, shall continue for the entire terms that the patents under which they are granted are in force or for that part of such terms for which the grantor has the right to grant such licenses.

2.04 (a) WESTERN grants under all patents issued in countries other than the United States and owned or controlled by AT&T, WESTERN or their SUBSIDIARIES, royalty-free immunity relating to the sale, lease or use in, or the importation into, such other countries of LICENSED PRODUCTS, and maintenance parts therefor, manufactured under the licenses granted under WESTERN'S PATENTS; provided, however, that nothing in this section 2.04(a) shall relieve the CORPORATION of its obligation to pay any royalty which may be predicated upon such manufacture of any such LICENSED PRODUCT or part, whether or not the first sale, lease or use thereof occurs outside of the United States.

(b) The CORPORATION grants under all patents issued in countries other than the United States and owned or controlled by it or its ASSOCIATED COMPANIES, royalty-free immunity relating to the sale, lease or use in, or the importation into, such other countries of LICENSED PRODUCTS, and maintenance parts therefor, manufactured under the licenses granted under the CORPORATION'S PATENTS.

2.05 The licenses granted for LICENSED PRODUCTS are licenses to make, have made, use, lease and sell such LICENSED PRODUCTS. Such licenses include the rights to maintain LICENSED PRODUCTS, to practice methods and processes involved in the use of LICENSED PRODUCTS and to make and have made, to use and have used, and to maintain machines, tools, materials and other instrumentalities, and to use and have used methods and processes, insofar as much machines, tools, materials, other instrumentalities, methods and processes are involved in or incidental to the development, manufacture, installation, testing or repair of LICENSED PRODUCTS.

2.06 The grant of each license to the CORPORATION includes the right to grant sublicenses within the scope of such license to its SUBSIDIARIES. The grant of each license to WESTERN or AT&T includes the right to grant sublicenses within the scope of such license to its ASSOCIATED COMPANIES. Such right of either party or AT&T may be exercised at any time prior to termination or cancellation of the corresponding license under the provisions of Article VI. Any such sublicenses granted to any present SUBSIDIARY or any present ASSOCIATED COMPANY may be made effective, retroactively, as of the effective date hereof, and any such sublicenses granted to any future SUBSIDIARY or any future ASSOCIATED COMPANY may be made effective, retroactively, as of the date such company became a SUBSIDIARY or an ASSOCIATED COMPANY.

ARTICLE III—ACQUISITION AND WARRANTY

3.01 WESTERN and the CORPORATION shall each acquire rights to inventions made during the FIVE YEAR PERIOD which relate to the subject matter of licenses granted and are made, in the course of their employment, either solely or jointly with anyone, by its or its ASSOCIATED COMPANIES' employees (and in the case of WESTERN'S obligation, by employees of AT&T or its SUBSIDIARIES) who are employed to do research, development or other inventive work, such that each grantee shall by virtue of this agreement, receive in respect of patents issued for such inventions, licenses and rights of the scope and upon the terms herein provided to be granted to such grantee.

3.02 WESTERN and, except as may be stated in a letter from the CORPORATION to WESTERN referring to this agreement and delivered before or concurrently with the execution hereof by WESTERN, the CORPORATION each warrants that there are no commitments or restrictions which will limit the licenses and rights granted by it under patents issued at any time for inventions owned at any time during the FIVE

YEAR PERIOD by it or any of its ASSOCIATED COMPANIES (and in the case of WESTERN'S warranty, by AT&T or any of its SUBSIDIARIES).

3.03 It is recognized that either party or any of its ASSOCIATED COMPANIES may have entered into or may hereafter enter into a contract with a national government to do development work financed by such government and may be required under such contract (either unconditionally or by reason of any action or inaction thereunder) to assign to such government its rights to grant, or may now or hereafter be restrained by such government from granting, licenses or immunities to others than its ASSOCIATED COMPANIES under patents for inventions arising out of such work or covered by such contract. The resulting inability of such party to grant the licenses or immunities purported to be granted by it under patents for such inventions shall not be considered to be a breach of this agreement, if:

(i) Such contract is for the benefit of such government's military or national defense establishment or the Energy Research and Development Administration of the United States Government or the National Aeronautics and Space Administration of the United States Government, or

(ii) In cases other than (i), such contract is with the United States Government or any agency of and within such Government, and any such requirement or restraint is pursuant to a statute or officially promulgated regulation of such Government or agency applicable to such contract;

provided, however, that:

(iii) Such party (or, if an ASSOCIATED COMPANY thereof has entered into such contract, such ASSOCIATED COMPANY) shall exert its best efforts to enable such party to grant the licenses or immunities herein purported to be granted by it under such patents; and

(iv) Within ninety (90) days after the filing of any application for any such patent, such party shall give written notice to the other party identifying such application by country, number and date of filing.

For the purposes of this section 3.03, AT&T, WESTERN and their ASSOCIATED COMPANIES shall all be deemed to be ASSOCIATED COMPANIES of one another, and the CORPORATION and its ASSOCIATED COMPANIES shall be deemed to be ASSOCIATED COMPANIES of one another.

ARTICLE IV—ROYALTY

4.01 The CORPORATION shall pay to WESTERN royalty, at the applicable rate hereinafter specified, on each LICENSED PRODUCT, and maintenance part therefor, which is a ROYALTY-BEARING PRODUCT, and

(i) Which is sold, leased or put into use by the CORPORATION or any of its SUBSIDIARIES while any license acquired hereunder by the CORPORATION with respect to such ROYALTY-BEARING PRODUCT shall remain in force, or

(ii) Which is made by or for the CORPORATION or any of its SUBSIDIARIES while any such license shall remain in force and is thereafter sold, leased or put into use by the CORPORATION or any of its SUBSIDIARIES,

whether or not such SUBSIDIARIES are sublicensed pursuant to section 2.06, such royalty rate to be applied, except as provided in section 4.05, to the NET SELLING PRICE of such ROYALTY-BEARING PRODUCT if sold for a separate consideration payable wholly in money and in all other cases to the FAIR MARKET VALUE thereof. The royalty rates applicable to LICENSED PRODUCTS of the kinds specified in section 2.01, and maintenance parts therefor, are as follows:

(iii) _____

_____

4.02 If a LICENSED PRODUCT is a ROYALTY-BEARING PRODUCT solely on account of one or a limited number of WESTERN'S PATENTS, the CORPORATION may elect to reduce the amount of royalty otherwise payable hereunder on said LICENSED PRODUCT by a royalty reduction percentage, and as of an effective date, established by WESTERN. Upon written request from the CORPORATION identifying the LICENSED PRODUCT and each relevant patent, WESTERN will inform the CORPORATION of the royalty reduction percentage applicable in respect of said LICENSED PRODUCT and patent or patents and the effective date thereof.

4.03 A LICENSED PRODUCT, or maintenance part therefor, which is made and sold by the CORPORATION or any of its SUBSIDIARIES and which is a ROYALTY-BEARING PRODUCT hereunder on account of one or more of WESTERN'S PATENTS, may be treated by the CORPORATION as not licensed and not subject to royalty hereunder if all of the following conditions are met:

(i) The purchaser is licensed under the same patent or patents, pursuant to another agreement, to have said LICENSED PRODUCT or part made;

(ii) The purchaser expressly advises the CORPORATION or its SUBSIDIARY, whichever effects the making and sale, in writing at or prior to (but in no event later than) the time of such sale that, in purchasing said LICENSED PRODUCT or part, it is exercising its own license or licenses under said patent or patents to have said LICENSED PRODUCT or part made; and

(iii) The CORPORATION retains such written advice and makes it available to WESTERN at the latter's request.

4.04 Only one royalty shall be payable hereunder in respect of any ROYALTY-BEARING PRODUCT. Royalty shall accrue hereunder on any LICENSED PRODUCT, or maintenance part therefor, upon its first becoming a ROYALTY-BEARING PRODUCT, and the royalty thereon shall become payable in accordance with the provisions of this Article IV upon the first sale, lease or putting into use thereof.

4.05 If any sale of a ROYALTY-BEARING PRODUCT shall be made by the CORPORATION or a SUBSIDIARY thereof to:

(i) Any company of which the CORPORATION is a SUBSIDIARY at the time of such sale, or

(ii) The CORPORATION or a SUBSIDIARY thereof or any other SUBSIDIARY of a company of which the CORPORATION is a SUBSIDIARY at the time of such sale,

royalty payable hereunder shall be computed on the FAIR MARKET VALUE of such ROYALTY-BEARING PRODUCT.

ARTICLE V—REPORTS AND PAYMENTS

5.01 The CORPORATION shall keep full, clear and accurate records with respect to ROYALTY-BEARING PRODUCTs. WESTERN shall have the right through its accredited auditing representatives to make an examination and audit, during normal business hours, not more frequently than annually, of all such records and such other records and accounts as may under recognized accounting practices contain information bearing upon the amount of royalty payable to it under this agreement. Prompt adjustment shall be made by the proper party to compensate for any errors or omissions disclosed by such examination or audit. Neither such right to examine and audit nor the right to receive such adjustments shall be affected by any statement to the contrary, appearing on checks or otherwise, unless such statement appears in a letter, signed by the party having such right and delivered to the other party, expressly waiving such right.[1]

5.02 (a) Within sixty (60) days after the end of each semiannual period ending on June 30th or December 31st, commencing with the semiannual period during which this agreement first becomes effective, the CORPORATION shall furnish to WESTERN a statement, in form acceptable to WESTERN; certified by a responsible official of the CORPORATION:

(i) Showing all ROYALTY-BEARING PRODUCTS, by kinds of LICENSED PRODUCTS, which were sold, leased or put into use during such semiannual period, the NET SELLING PRICES of such ROYALTY-BEARING PRODUCTS or (where royalty is based on FAIR MARKET VALUES) the FAIR MARKET VALUES thereof and the amount of royalty payable thereon (or if no such ROYALTY-BEARING PRODUCT has been so sold, leased or put into use, showing that fact);

(ii) Identifying, if royalty is reduced under provisions of section 4.02, each LICENSED PRODUCT by its type and the patent or patents involved in such royalty reduction;

(iii) Showing, by purchasers and kinds of LICENSED PRODUCTS, the monetary totals of the sales, to each purchaser exercising its own ''to have made'' license or licenses, of LICENSED PRODUCTS and maintenance parts in transactions of the character described in section 4.03; and

(iv) Identifying all transactions of the character described in section 4.05.

(b) Within such sixty (60) days the CORPORATION shall, irrespective of its own business and accounting methods, pay to WESTERN the royalties payable for such semiannual period.

(c) Notwithstanding the provisions of section 7.04(a)(v), the CORPORATION shall furnish whatever additional information WESTERN may reasonably prescribe from time to time to enable WESTERN to ascertain which LICENSED PRODUCTS (and maintenance parts therefor) sold, leased or put into use by the CORPORATION or any of its SUBSIDIARIES are subject to the payment of royalty to WESTERN, and the amount of royalty payable thereon.

5.03 Royalty payments provided for in this agreement shall, when overdue, bear interest at an annual rate of one percent (1%) over the prime rate or successive prime rates in effect in New York City during delinquency.

5.04 Payment to WESTERN shall be made in United States dollars to WESTERN'S Treasury Organization at 222 Broadway, New York, New York 10038, or at such changed address as WESTERN shall have specified by written notice. If any royalty for any semiannual period referred to in section 5.02 is computed in other currency, conversion to United States dollars shall be at the prevailing rate for bank cable transfers on New York City as quoted for the last day of such semiannual period by leading banks dealing in the New York City foreign exchange market.

[1] If licensee insists on a non-Western auditor, third line, insert, after ''representatives'', -or, at the election of the CORPORATION, through a firm of certified public accountants proposed by WESTERN and accepted by the CORPORATION-.

ARTICLE VI—TERMINATION, CANCELLATION AND SURRENDER

6.01 Any termination under the provisions of this Article VI by one party of licenses and rights of the other party shall not affect the licenses and rights of the terminating party and its sublicensees (or of AT&T and its sublicensees if WESTERN is the terminating party), nor the obligations of the CORPORATION under the provisions of Articles IV and V if it is the terminating party.

6.02 If WESTERN shall fail to fulfill one or more of its obligations under this agreement, the CORPORATION may, upon election and in addition to any other remedies that it may have, at any time terminate all licenses and rights granted to WESTERN and AT&T hereunder, by not less than six (6) months' written notice to WESTERN specifying any such breach, unless within the period of such notice all breaches specified therein shall have been remedied.

6.03 (a) If the CORPORATION shall fail to fulfill one or more of:

(i) Its obligations under Articles IV or V, or

(ii) Its obligations under this agreement whereby WESTERN or AT&T fails to receive licenses or rights which it is entitled hereunder to receive under patents issued in the United States,

WESTERN may, upon the election and in addition to any other remedies that it may have, at any time terminate all licenses and rights granted to the CORPORATION hereunder, by not less than six (6) months' written notice to the CORPORATION specifying any such breach, unless within the period of such notice all breaches specified therein shall have been remedied.

(b) Termination by WESTERN of licenses and rights granted to the CORPORATION shall terminate the obligations of the CORPORATION under the provisions of Articles IV and V relating to such terminated licenses and rights, except such obligations as to ROYALTY-BEARING PRODUCTS made, sold, leased or put into use prior to such termination.

6.04 (a) By written notice to WESTERN, the CORPORATION may cancel the licenses for any specified products granted hereunder to it under WESTERN'S PATENTS. Such cancellation shall be effective as of the date of giving said notice but shall not relieve the CORPORATION of its obligation to pay accrued royalties with respect to such specified products.

(b) By written notice to the CORPORATION, WESTERN or AT&T may cancel the licenses for any specified products granted hereunder to it under the CORPORATION'S PATENTS, such cancellation to be effective as of the date of giving said notice.

6.05 By written notice to WESTERN, specifying any of WESTERN'S PATENTS by number and date of issuance, the CORPORATION may surrender and terminate all licenses and rights granted to it under such specified patent or patents or under any specified invention or inventions thereof. Such surrender and termination shall be effective as of a date specified in said notice which shall not be more than six (6) months prior to the date of giving said notice. As of said effective date, such specified patent or patents or invention or inventions shall cease to be among, or among the inventions of, WESTERN'S PATENTS for the purposes of this agreement without affecting obligations in respect of royalties accrued prior to said effective date.

6.06 (a) Every sublicense granted by a party or AT&T shall terminate with termination or cancellation of its corresponding license.

(b) Any sublicenses granted shall terminate if and when the grantee thereof ceases to be an ASSOCIATED COMPANY of WESTERN or AT&T or a SUBSIDIARY of the CORPORATION. Each LICENSED PRODUCT and each maintenance part, made by or for a SUBSIDIARY of the CORPORATION, and on which royalty has accrued but which remains not sold, leased or put into use at the time such SUBSIDIARY ceases to be a SUBSIDIARY of the CORPORATION, shall be deemed to have been put into use by such SUBSIDIARY immediately prior to such time at the place said LICENSED PRODUCT or part is then located.

(c) If an ASSOCIATED COMPANY'S relationship to a party or AT&T changes so that such ASSOCIATED COMPANY is no longer an ASSOCIATED COMPANY of such party or AT&T, licenses and rights acquired under the patents and patent rights of such ASSOCIATED COMPANY for inventions made prior to the date such relationship changed shall not be affected by such change.

6.07 Licenses, immunities and rights with respect to each LICENSED PRODUCT, and each maintenance part, made, sold, leased or put into use prior to any termination or cancellation under the provisions of this Article VI shall survive such termination or cancellation.

ARTICLE VII—MISCELLANEOUS PROVISIONS

7.01 With respect to patents or inventions owned jointly by the CORPORATION, or any of its ASSOCIATED COMPANIES, with any other person or persons who has or have granted, or who shall hereafter grant, to WESTERN or AT&T, licenses or other rights thereunder, the CORPORATION, to the extent that the licenses and rights so granted do not exceed the scope of the licenses and rights herein granted by the CORPORATION, consents to the grant of licenses and rights to WESTERN and AT&T under such patents and inventions by such other person or persons.

7.02 (a) Each party shall, upon written request from the other party sufficiently identifying any patent by country, number and date of issuance, inform the other party as to the extent to which any such patent is subject to the licenses, immunities and rights granted to such other party.

(b) If such licenses, immunities or rights under any such patent are restricted in scope, copies of all pertinent provisions of any contract (other than provisions of a contract with a government to the extent that disclosure thereof is prohibited under that government's laws or regulations) creating such restrictions shall, upon request, be furnished to the party making such request.

7.03 Upon written request from one party, the other party shall inform the requesting party which of said other party's patents cover inventions under which the United States Government holds a royalty-free license.

7.04 (a) Nothing contained in this agreement shall be construed as:

(i) Requiring the filing of any patent application, the securing of any patent or the maintaining of any patent in force; or

(ii) A warranty or representation by any grantor as to the validity or scope of any patent; or

(iii) A warranty or representation that any manufacture, sale, lease, use or importation will be free from infringement of patents other than those under which and to the extent to which licenses or immunities are in force hereunder; or

(iv) An agreement to bring or prosecute actions or suits against third parties for infringement; or

(v) An obligation to furnish any manufacturing or technical information or assistance; or

(vi) Conferring any right to use, in advertising, publicity or otherwise, any name, trade name or trademark, or any contraction, abbreviation or simulation thereof; or

(vii) Conferring by implication, estoppel or otherwise upon any grantee any license or other right under any patent, except the licenses and rights expressly granted to such grantee; or

(viii) An obligation upon any grantor to make any determination as to the applicability of any patent to any product of any grantee or any of its ASSOCIATED COMPANIES; or

(ix) A release for any infringement prior to the effective date hereof.

(b) Neither party nor AT&T makes any representations, extends any warranties of any kind or assumes any responsibility whatever with respect to the manufacture, sale, lease, use or importation of any LICENSED PRODUCT, or part therefor, by any grantee, any of its ASSOCIATED COMPANIES, or any direct or indirect supplier or vendee or other transferee of any such company, other than the licenses, immunities, rights and warranties expressly herein granted.

7.05 Neither this agreement nor any licenses or rights hereunder, in whole or in part, shall be assignable or otherwise transferable.

7.06 Any notice, request or information shall be deemed to be sufficently given when sent by registered mail addressed to the addressee at its office above specified (and when addressed to WESTERN, to the attention of its Patent Licensing Organization) and any royalty statement shall be deemed to be sufficiently furnished when sent by registered mail addressed to WESTERN'S Treasury Organization at 222 Broadway, New York, New York 10038, or at such changed address as the addressee shall have specified by written notice.

7.07 This agreement sets forth the entire agreement and understanding between the parties as to the subject matter hereof and merges all prior discussions between them and neither of the parties shall be bound by any conditions, definitions, warranties, understandings or representations with respect to such subject matter other than as expressly provided herein, or in any prior existing written agreement between the parties, or as duly set forth on or subsequent to the effective date hereof in writing and signed by a proper and duly authorized representative of the party to be bound thereby.

7.08 The construction and performance of this agreement shall be governed by the law of the State of New York.

IN WITNESS WHEREOF, each of the parties has caused this agreement to be executed in duplicate originals by its duly authorized representatives on the respective dates entered below.

WESTERN ELECTRIC COMPANY, INCORPORATED

By _____

Director of Patent Licensing

_____

Date

[SEAL]

Attest:

_____

Secretary

By _____

Title _____

_____

Date

[SEAL]

Attest:

_____

Secretary

GENERAL DEFINITIONS APPENDIX

ASSOCIATED COMPANIES of AT&T are The Southern New England Telephone Company, a Connecticut corporation, and its SUBSIDIARIES, Cincinnati Bell Inc., an

Ohio corporation, and its SUBSIDIARIES, and SUBSIDIARIES of AT&T other than WESTERN and its SUBSIDIARIES.

ASSOCIATED COMPANIES of the CORPORATION are SUBSIDIARIES of the CORPORATION, companies presently having the CORPORATION as a SUBSIDIARY and other SUBSIDIARIES of such companies.

ASSOCIATED COMPANIES of WESTERN are SUBSIDIARIES of WESTERN.

The CORPORATION'S PATENTS means all patents issued at any time in the United States for:

(i) Inventions made prior to the termination of the FIVE YEAR PERIOD and owned or controlled at any time during the FIVE YEAR PERIOD by the CORPORATION or any of its ASSOCIATED COMPANIES,

(ii) Inventions made during the FIVE YEAR PERIOD, solely or jointly with anyone, and in the course of their employment by employees of any such company who are employed to do research, development or other inventive work, and

(iii) Any other inventions made prior to the termination of the FIVE YEAR PERIOD, with respect to which and to the extent to which any such company shall at any time during the FIVE YEAR PERIOD have the right to grant the licenses and rights which are herein granted by the CORPORATION.

FAIR MARKET VALUE means the NET SELLING PRICE which the CORPORATION or any of its SUBSIDIARIES, whichever effects the sale, lease or use of the product or maintenance part, would realize from an unaffiliated buyer in an arm's length sale of an identical product or maintenance part in the same quantity and at the same time and place as such sale, lease or use.

FIVE YEAR PERIOD means the period commencing on the effective date of this agreement and having a duration of five years.

LICENSED PRODUCT means, as to any respective grantee,

(i) any product as such, or

(ii) any product which is any specified combination.

of the kinds listed in section 2.01 or 2.02 of this agreement. Although the term does not mean, and although licenses are not granted for, any other combination, a LICENSED PRODUCT

(iii) shall not lose its status as such on account of, and

(iv) shall not cause an unlicensed combination to infringe the grantor's patents (i.e., WESTERN'S PATENTS or the CORPORATION'S PATENTS, as the case may be) solely on account of, such LICENSED PRODUCT being made, sold, leased or put into use as part of an unlicensed combination.

NET SELLING PRICE means the gross selling price of the ROYALTY-BEARING PRODUCT in the form in which it is sold, whether or not assembled (and without excluding therefrom any components or subassemblies thereof, whatever their origin and whether or not patent impacted), less the following items but only insofar as they pertain to the sale of such ROYALTY-BEARING PRODUCT by the CORPORATION or any of its SUBSIDIARIES and are included in such gross selling price:

(i) Usual trade discounts actually allowed (other than cash discounts, advertising allowances, or fees or commissions to any employees of the CORPORATION, a SUBSIDIARY of the CORPORATION, a company of which the CORPORATION is a SUBSIDIARY at the time of the sale, or any other SUBSIDIARY of a company of which the CORPORATION is a SUBSIDIARY at the time of such sale);

(ii) Packing costs;

(iii) Import, export, excise and sales taxes, and customs duties;

(iv) Costs of insurance and transportation from the place of manufacture to the customer's premises or point of installation;

(v) Costs of installation at the place of use; and

(vi) Costs of special engineering services not incident to the design or manufacture of the ROYALTY-BEARING PRODUCT.

ROYALTY-BEARING PRODUCT means any LICENSED PRODUCT of the kinds specified in section 2.01 of this agreement (other than any LICENSED PRODUCT for which all the licenses granted in this agreement are at a royalty rate of zero percent (0%)), and any maintenance part therefor,

(i) Which upon manufacture includes, or the manufacture of which employs, any invention of any of WESTERN'S PATENTS in force at the time and place of such manufacture, or

(ii) Which includes when sold, leased or put into use, or the use of which employs, any invention of any of WESTERN'S PATENTS in force at the time and place of such sale, lease or use,

other than:

(iii) Inventions under which the United States Government holds a royalty-free license if such LICENSED PRODUCT or part is contracted for, directly or indirectly, by the United States Government, or by another national government with funds derived through the Military Assistance Program or otherwise through the United States Government, and

(iv) Inventions employed in the manufacture of, or included in, such LICENSED PRODUCT or any original part thereof, or such maintenance part therefor or any

original part thereof, by a direct or indirect supplier of the CORPORATION or any of its SUBSIDIARIES, but only to the extent such supplier has exercised its own licenses granted by WESTERN under patents for such inventions to so employ or include said inventions.

SUBSIDIARY means a company the majority of whose stock entitled to vote for election of directors is now or hereafter controlled by the parent company either directly or indirectly, but any such company shall be deemed to be a SUBSIDIARY only so long as such control exists.

WESTERN'S PATENTS means all patents issued at any time in the United States for:

(i) Inventions made prior to the termination of the FIVE YEAR PERIOD and owned or controlled at any time during the FIVE YEAR PERIOD by AT&T, WESTERN or any of their SUBSIDIARIES,

(ii) Inventions made during the FIVE YEAR PERIOD, solely or jointly with anyone, and in the course of their employment by employees of any such company who are employed to do research, development or other inventive work, and

(iii) Any other inventions made prior to the termination of the FIVE YEAR PERIOD, with respect to which and to the extent to which any such company shall at any time during the FIVE YEAR PERIOD have the right to grant the licenses and rights which are herein granted by WESTERN;

provided, however, that said patents do not include those issued for inventions made by employees of any SUBSIDIARY of WESTERN or AT&T exclusively engaged in the performance of contracts with the Energy Research and Development Administration of the United States.

[41 FR 28699, July 12, 1976, as amended at 50 FR 47549, Nov. 19, 1985]

§ 68.506 Configurations used to connect multi-line communications systems such as Private Branch Exchange (PBX) and key telephone systems.

Any of the jack configurations specified in § 68.502, used singly, in multiple combinations, or combined in common mechanical arrays, may be used as the interface between multi-line equipment such as PBX and key telephone systems, and the telephone network. The telephone company and installation supervisor may mutually agree to use electrical connections alternative to those specified in § 68.502.

[43 FR 16501, Apr. 19, 1978]

PART 69—ACCESS CHARGES

Subpart A—General

Sec.
69.1 Application of access charges.
69.2 Definitions.
69.3 Filing of access service tariffs.
69.4 Charges to be filed.
69.5 Persons to be assessed.

Subpart B—Computation of Charges

69.101 General.
69.103 Limited pay telephone (public telephones that can access the services of only one interexchange carrier).
69.104 End user common line.
69.105 Carrier common line.
69.106 Local switching.
69.107 Equal access.
69.108 Transport rate benchmark.
69.109 Information.
69.110 Entrance facilities.
69.111 Tandem-switched transport and tandem charge.
69.112 Direct-trunked transport.
69.113 Non-premium charges for MTS–WATS equivalent services.
69.114 Special access.
69.115 Special access surcharges.
69.116 Universal service fund.
69.117 Lifeline assistance.
69.118 Traffic sensitive switched services.
69.119 Basic service element expedited approval process.
69.120 Line information database.
69.121 Connection charges for expanded interconnection.
69.122 Contribution charges for special access and expanded interconnection.
69.123 Density pricing zones for special access and switched transport.
69.124 Interconnection charge.
69.125 Dedicated signalling transport.
69.126 Nonrecurring charges.
69.127 Transitional Equal Charge Rule.
69.128 Billing name and address.
69.129 Signalling for tandem switching.

Subpart C—Computation of Transition Charges

69.201 General.
69.203 Transitional end user common line charges.
69.204 Optional alternative carrier common line tariff provisions.
69.205 Transitional premium charges.
69.209 Annual 1989 access tariff filings.

Subpart D—Apportionment of Net Investment

69.301 General.
69.302 Net investment.