SAR Measurement Procedures for 3G Devices

– CDMA 2000 / Ev-Do –

– WCDMA / HSDPA / HSPA –

October 2007

(Revised)

Laboratory Division

Office of Engineering and Technology

Federal Communications Commission

(***Note: Acrobat Reader 8 required to view attachment files***)

Table of Contents

Table of Contents 1
Summary 4
CDMA 2000 1x Handsets 7
Output Power Verification 7
Head SAR Measurements 7
Body SAR Measurements 7
Handsets with Ev-Do 8
1x Ev-Do Data Devices 9
Output Power Verification 9
SAR Measurements 9
1x RTT Support 10
WCDMA Handsets 11
Output Power Verification 11
Head SAR Measurements 11
Body SAR Measurements 12
Handsets with Release 5 HSDPA 12
Handsets with Release 6 HSPA (HSDPA/HSUPA) 12
Release 5 HSDPA Data Devices 13
Output Power Verification 13
SAR Measurements 13
Release 6 HSPA Data Devices 15
Output Power Verification 15
SAR Measurements 16
APPENDIX A: CDMA 2000 Transmitter Configuration Info 17
Terms & Definitions 18
Reverse Link Architecture and Channel Structures 20
Logical and Physical Channel assignments 20
Orthogonal Spreading 22
Forward CDMA Channel Signals and Radio Configurations 23
Reverse CDMA Channel Signals and Radio Configurations 23
Data Rates, Modulation and Channel Gain Parameters 25
Service Option Number Assignments 28
Service Option 2, 9, 30, 31, 55 29
Required Multiplex Option Support 30
Interface to Multiplex Options 31
Test Data Service Option (TDSO SO32) 33
Test Modes 35
Open Loop Output Power for Reverse Link Channels 36
Maximum RF Output Power 37
Code Channel Output Power for the Reverse Traffic Channel (C.S0011) 40
APPENDIX B: 1x Ev-Do Transmitter Configurations Info 41

APPENDIX B: 1x Ev-Do Transmitter Configurations Info 42
Terms and Definitions 42
1x Ev-Do Rev. 0 Reverse Link Channel Structures 43
1x Ev-Do Rev. 0 Channel Spreading, Combining and Code Scrambling 43
Device Test Configurations 44
Default (Subtype 0) and Subtype 1 physical Layer Protocol 44
Reverse Channel Structure 45
Data Rate and Modulation 45
Reverse Traffic Channel Output Power 46
Subtype 2 Physical Layer Protocol (Rev. A) 47
Reverse Channel Structure 48
Data Rate and Modulation 49
Maximum RF Output Power 52
Method of Measurement: C.S0033-0 3.1.2.3.4 (Rev. 0) 52
Method of Measurement: C.S0033-A 4.3.4 (Rev. A) 52
1x Ev-Do Summary Notes 54
APPENDIX C: WCDMA Transmitter Configuration Info 57
Definitions 58
Abbreviations 58
Frequency Bands 59
Channel Spacing 60
Channel Raster 60
UARFCN 60
Channel Number 60
Maximum Output Power 62
Physical Channels 63
Dedicated Uplink Physical Channels 65
Channelization Codes 67
Uplink DPCCH Time Slot Format 68
Radio Access Bearer (RAB) and Signaling Radio Bearer (SRB) 68
Test Loop Mode 70
Adaptive Multi-Rate (AMR) 71
UL Reference Measurement Channel 72
12.2 kbps UL Reference Measurement Channel 72
64 kbps UL Reference Measurement Channel 74
144 kbps UL Reference Measurement Channel 77
384 kbps UL Reference Measurement Channel 80
768 kbps UL Reference Measurement Channel 82
Measurement of Transmitter Characteristics 84
WCDMA Summary Notes 85
APPENDIX D: Release 5 HSDPA Transmitter Configuration Info 89
Abbreviations 89
UE Maximum Output Power with HS-DPCCH 91
HS-DPCCH 92

HSDPA DL Physical Channel Parameters 92
Reference Channels 93
Fixed Reference Channels (FRC) 93
Variable Reference Channels 94
DL Fixed Reference Channel (FRC) Parameters for HSDPA Tests 94
β Values for Transmitter Characteristics Tests with HS-DPCCH 94
Fixed Reference Channel Definition H-Set 1 95
Fixed Reference Channel Definition H-Set 2 96
Fixed Reference Channel Definition H-Set 3 97
Fixed Reference Channel Definition H-Set 4 98
Fixed Reference Channel Definition H-Set 5 99
Fixed Reference Channel Definition H-Set 6 100
Mapping Between HS-DSCH Category and FRC 101
Mapping of CQI Values for UE Categories 102
HSDPA Summary Notes 103
APPENDIX E: Release 6 HSPA (HSUPA/HSDPA) Transmitter Configuration Info 106
Definitions 107
Abbreviations 107
Transport Channels 108
Dedicated Physical Channels 108
E-DPCCH and E-DPDCH 109
HS-DPCCH (Release 6) 114
Uplink Scheduling 115
E–DCH Absolute Grant Channel (E-AGCH) 116
E-DCH Relative Grant Channel (E-RGCH) 116
E-DCH Hybrid ARQ Indicator Channel (E-HICH) 117
Fractional Dedicated Physical Channel (F-DPCH) 117
HARQ Entity 118
HARQ Processes 118
Happy Bit 118
UE Maximum Output Power with HS-DPCCH and E-DCH 119
E-DCH UE Categories 120
DL Reference Measurement Channel for E-DCH Tests 121
UL Reference Measurement Channel for E-DCH Tests 121
E-DCH Channel Configurations 122
E-DCH Beta Values 122
E-DCH Transport Block Size Tables 123
Radio Bearer and Serving Cell settings 127
Downlink Physical Channel Configurations 128
Connection Setup Levels 128
DL Physical Channel Parameters for E-DCH Transmitter Characteristics Tests 128
APPENDIX F: HPSK Summary Info 129

Summary

The 3G device test configurations described in this document are intended to provide uniform operating procedures for testing the SAR of currently available handsets and wireless data devices operating in the cellular, PCS and AWS/WCS bands according to Parts 22(H), 24(E), 27(L) and 27(M) of the FCC rules.[1] These device setup procedures include CDMA 2000 and WCDMA handsets, Ev-Do and HSDPA/HSPA data terminals or CDMA 2000/Ev-Do and WCDMA/HSDPA/HSPA handsets. As new releases of 3GPP and 3GPP2 standards continue to evolve, updates are necessary for existing procedures to address the operating requirements of new products.

SAR for head and body exposure conditions are measured according to procedures in Supplement C; on the High, Middle and Low channels, with antenna extended and retracted. SAR must be measured using the IEEE 1528 SAM phantom for exposures next to the ear.[2] A flat phantom should be used for all other body exposure conditions. Head exposure conditions are tested on the left and right side of the SAM phantom in the touch and tilt positions. Body exposure conditions are tested according to procedures in Supplement C, either with manufacturer supplied body-worn accessories or a fixed separation between the DUT and a flat phantom. Body SAR must be measured according to the test setup and operating configurations required for the individual device or host product category; for example, handsets, laptop computers, PDAs etc. When VOIP is available for devices with Ev-Do, HSPA or similar high speed data modes to operate in configurations next to the ear, head exposure conditions are applicable.[3]

3G devices are designed to operate in highly dynamic conditions with variable data rates, spreading factors, multiple code channels and various combinations of other configurations to optimize throughput and performance. Since many of these highly optimized dynamic configurations normally do not provide stable conditions for compliance testing, 3GPP and 3GPP2 have specified test mode configurations for product conformance evaluation. Consequently, some of these defined test modes and device operating configurations may also be considered for SAR measurements according to the dominant normal use and RF exposure conditions.

Based on the design and operating requirements of each wireless technology, tests for all combinations of data rate and code channel configurations may not be required for certain lower output modes. However, advances in wireless technologies have also introduced certain SAR measurement difficulties that have not been addressed in exiting SAR standards. A probe calibrated with CW signals may not measure correctly the SAR of digital signals with noise-like modulations of varying peak to average power ratios or voltage crest factors. This was demonstrated for an IS-95 signal, in 2002 by the IEEE SCC-34/SC-2 committee during its

[1] The procedures are only applicable to frequency bands that are fully defined and supported by 3GPP and 3GPP2.
[2] The most current version of Supplement C should be used.
[3] 1x Ev-Do Rev. A and Release 6 HSPA, or later, may support VOIP operations.

development of IEEE Standard 1528. It was reported that the measured SAR error would vary as a function of the signal power level. The discrepancies were estimated to be within 10% at typical CDMA (IS-95) handset output levels of 200-300 mW and increase exponentially with power. The Commission's Laboratory had also conducted some preliminary measurements using a combination of 3G handsets and signal sources with similar findings. The results reveal that SAR errors vary with SAR levels. Since a multitude of external factors may influence tissue energy absorption from RF sources, this implies SAR measurement errors are dependent on the energy absorbed in tissues, which may not have an exact or direct relationship to the output power of a source. The investigations show that errors can also be dependent on the type of SAR probes used in each measurement. Probes with a smaller probe tip diameter (2.5 mm) show less errors than the larger probes (6.8 mm) typically used at cellular and PCS frequencies.

Uniform device operating configurations are defined in this document for SAR testing. The intent is to minimize SAR measurement variations due to inconsistent test device operating conditions and to reduce redundant test configurations. However, errors due to incompatible SAR measurement and wireless technologies must also be addressed to reduce the total SAR variation. Until comprehensive analyses similar to those conducted earlier, for IS-95, by the IEEE committee are available to address SAR probe calibration and measurement protocol issues, a sufficient level of conservativeness is necessary for existing procedures to ensure compliance. As an increasing number of data modes and configurations are introduced in the new generation of 3G devices, certain tests could become redundant or unnecessary. Since SAR measurements are usually quite time consuming, it would be advantageous to consider output power as a pre-screening tool to determine the SAR tests that are necessary, according to a larger subset of the device configurations, to demonstrate compliance. In addition to the set of minimal test configurations, certain measurements that are normally not required may also be triggered according to the operating characteristics and exposure conditions of an individual device. This ensures compliance is not compromised due to certain external factors that may change the output power and SAR relationship between a test device and nearby tissues. For handsets with built-in Ev-Do or HSDPA/HSPA capabilities that operate with the same RF components for both voice and high speed data, further test reduction is also considered to minimize test redundancy.

A communication test set or basestation simulator is required to configure the operating parameters of a test device through an air link with call processing. However, there could be delays for certain test equipment to provide full support for the most recent versions and releases of specific protocols, such as Ev-Do Rev. B or HSPA. In limited circumstances, it might be possible to use chipset based Factory Test Mode (FTM) to configure a device; but these are usually inadequate when active power control is necessary to maintain the required operating characteristics during measurements.[4] FTM normally requires proprietary software operating on a computer to establish the necessary device operating parameters through a serial or USB port

[4] When the required device operating configurations are not established and maintained using a commercial communication test set with production releases of firmware or software through call processing, contact the FCC Laboratory to determine if the specific test configurations are applicable or if filing restrictions may apply. Substantial details are required to determine if experimental or proprietary versions of firmware or software used in communication test sets or FTM are acceptable.

and additional equipment is also required to maintain stable test conditions. Regardless of how the connection is established, call processing or FTM, the output conditions of the test device must be closely monitored with applicable equipment, such as a communication test set, analyzers or power meters, to ensure the required code channels, operating and output conditions are maintained during the SAR measurement. The device operating parameters described by the procedures in this document should be closely followed and fully documented in test reports to enable tests to be repeated easily with sufficient accuracy.

Additional information describing the operating characteristics and test configurations of 3G devices and technologies are included in the Appendices. The contents are mostly adapted from relevant 3G standards and on-going drafts that are only meant to provide quick references on certain useful topics concerning the test procedures. The information should not be treated as tutorials. Since 3G technologies and operating protocols share certain similarities, more detail discussions on certain subjects may appear for one technology than others in the Appendices. Some information relating to future protocol releases are also included to facilitate discussions and to minimize future changes necessary for this document. More detail explanations and up-to-date information for the underlying wireless protocols and technologies are available from the following web sites: http://www.3gpp2.org/Public_html/specs/alltsgscfm.cfm and http://www.3gpp.org/ftp/Specs/html-info/SpecReleaseMatrix.htm.

CDMA 2000 1x Handsets

The following procedures apply to handsets operating under CDMA 2000 Release 0 and Release A, single carrier (1x) modes with MS Protocol Revision 6 & 7 (**P_REV 6 & 7**)[5]. The default test configuration is to measure SAR in RC3 with an established radio link between the DUT and a communication test set. SAR in RC1 is selectively confirmed according to output power and exposure conditions. The forward and reverse links should be configured with the same RC. Maximum output power is verified according to procedures defined in 3GPP2 and TIA-98-E, and SAR must be measured according to these maximum output conditions.

Output Power Verification

Maximum output power is verified on the High, Middle and Low channels according to procedures in section 4.4.5.2 of 3GPP2 C.S0011/TIA-98-E. Results for at least steps 3, 4 and 10 of the power measurement procedures should be tabulated in the SAR report. Steps 3 and 4 should be measured using SO55 with power control bits in "All Up" condition. TDSO / SO32 may be used instead of SO55 for step 4. Step 10 should be measured using TDSO / SO32 with power control bits in the "Bits Hold" condition (i.e. alternative Up/Down Bits). All power measurements defined in C.S0011/TIA-98-E that are inapplicable to the DUT or cannot be measured due to technical or equipment limitations should be clearly identified in the test report.[6]

Head SAR Measurements

SAR for head exposure configurations is measured in RC3 with the DUT configured to transmit at full rate using Loopback Service Option SO55. SAR for RC1 is not required when the maximum average output of each channel is less than ¼ dB higher than that measured in RC3. Otherwise, SAR is measured on the maximum output channel in RC1 using the exposure configuration that results in the highest SAR for that channel in RC3.[7]

Body SAR Measurements

SAR for body exposure configurations is measured in RC3 with the DUT configured using TDSO / SO32, to transmit at full rate on FCH with all other code channels disabled. SAR for multiple code channels (FCH + SCH_n) is not required when the maximum average output of each RF channel is less than ¼ dB higher than that measured with FCH only. Otherwise, SAR is measured on the maximum output channel (FCH + SCH_n) with FCH at full rate and SCH_0 enabled at 9600 bps, using the exposure configuration that results in the highest SAR with FCH

[5] Additional considerations are necessary for other versions of CDMA 2000, which are considered on a case-by-case basis until procedures are available.
[6] Contact the FCC Laboratory for recommendations on measurement or equipment difficulties before conducting the measurements.
[7] The highest head SAR measured for the left & right side, in touch & tilt positions with antenna extended and retracted on a channel in RC3. The possible channels are the High, Middle or Low channel.

only for that channel.[8] When multiple code channels are enabled, the DUT output may shift by more than 0.5 dB and lead to higher SAR drifts and SCH dropouts.[9]

Body SAR in RC1 is not required when the maximum average output of each channel is less than ¼ dB higher than that measured in RC3.[10] Otherwise, SAR is measured on the maximum output channel in RC1; with Loopback Service Option SO55, at full rate, using the body exposure configuration that results in the highest SAR for that channel in RC3.[11]

Handsets with Ev-Do

For handsets with Ev-Do capabilities, when the maximum average output of each channel in Rev. 0 is less than ¼ dB higher than that measured in RC3 (1x RTT), body SAR for Ev-Do is not required.[11] Otherwise, SAR for Rev. 0 is measured on the maximum output channel, at 153.6 kbps using the body exposure configuration that results in the highest SAR for that channel in RC3.[11] SAR for Rev. A is not required when the maximum average output of each channel is less than that measured in Rev. 0 or less than ¼ dB higher than that measured in RC3. Otherwise, SAR is measured on the maximum output channel for Rev. A using a Reverse Data Channel payload size of 4096 bits and a Termination Target of 16 slots defined for Subtype 2 Physical Layer configurations. A Forward Traffic Channel data rate corresponding to the 2-slot version of 307.2 kbps with the ACK Channel transmitting in all slots should be configured in the downlink for both Rev. 0 and Rev. A.[12]

---

[8] The highest body SAR measured with Antenna Extended & Retracted for FCH only in RC3 using TDSO / SO32. The possible channels are the High, Middle or Low channel.

[9] The output power and operating conditions for FCH + SCH_0 are adjusted according to procedures in section 4.4.5.2 of 3GPP2 C.S0011/TIA-98-E. Depending on the design of an individual device, the maximum output power condition may drift and code domain power must be monitored to ensure SCH does not dropout during the SAR measurement. When applicable, it could be desirable to consider using FTM (Factory Test Mode) to configure the DUT if more stable operating conditions can be achieved for this SAR measurement; however, basestation support and monitoring is still required.

[10] RC3 channels include both the FCH only and FCH+SCH_0 configurations, with antenna extended and retracted.

[11] The highest SAR measured for a body-worn accessory with antenna extended and retracted on a channel in RC3 for FCH only and FCH+SCH_0. The possible channels are the High, Middle & Low channel.

[12] Ev-Do procedures for data devices (next section) should be followed to configure the handset for SAR measurements.

1x Ev-Do Data Devices

The following procedures apply to Access Terminals (AT) operating under CDMA 2000 High Rate packet Data, Rev. 0 and Rev. A, 1x Ev-Do protocols. SAR for body exposure conditions are typically required devices with Ev-Do capabilities, including handsets and data modems operating in various electronic devices. When VOIP is available for Ev-Do devices to operate in configurations next to the ear, head exposure conditions are applicable.[13] The default test configuration is to measure SAR with an established radio link between the AT and a communication test set according to 3GPP2 Test Application Protocols (TAP), FTAP/RTAP for Rev. 0 and FETAP/RETAP for Rev. A[14]. The code channel power levels, RF channel output power (All Bits Up) and other operating parameters should be actively monitored and controlled by the communication test set during the SAR measurement. The use of FTM should be avoided.[15] Maximum output power is verified according to procedures defined in 3GPP2 C.S0033 and TIA-866, and SAR must be measured according to these maximum output conditions.

Output Power Verification

Maximum output power is verified on the High, Middle and Low channels according to procedures in section 3.1.2.3.4 of 3GPP2 C.S0033-0/TIA-866 for Rev. 0 and section 4.3.4 of 3GPP2 C.S0033-A for Rev. A. For Rev. A, maximum output power for both Subtype 0/1 and Subtype 2 Physical Layer configurations should be measured. The device operating configurations under TAP/ETAP should be documented in the test report; including power control, code channel and RF channel output power levels. The measurement results should be tabulated in the SAR report with any measurement difficulties and equipment limitations clearly identified.[16]

SAR Measurements

SAR is measured using FTAP/RTAP and FETAP/RETAP respectively for Rev. 0 and Rev. A devices. The AT is tested with a Reverse Data Channel rate of 153.6 kbps in Subtype 0/1 Physical Layer configurations; and a Reverse Data Channel payload size of 4096 bits and Termination Target of 16 slots in Subtype 2 Physical Layer configurations. Both FTAP and FETAP are configured with a Forward Traffic Channel data rate corresponding to the 2-slot version of 307.2 kbps with the ACK Channel transmitting in all slots. AT power control should be in "All Bits Up" conditions for TAP/ETAP.

Body SAR is measured using Subtype 0/1 Physical Layer configurations for Rev. 0. SAR for Subtype 2 Physical layer configurations is not required for Rev. A when the maximum average

[13] 1x Ev-Do Rev. A may support VOIP operations.
[14] See 3GPP2 C.S0029-0 and C.S0029-A, Test Application Specification (TAS), for details on FTAP/RTAP and FETAP/RETAP operations.
[15] Consult the FCC Laboratory for measurement requirements and filing restrictions.
[16] Contact the FCC Laboratory for recommendations on measurement or equipment difficulties before conducting the measurements.

output of each RF channels is less than that measured in Subtype 0/1 Physical layer configurations. Otherwise, SAR is measured on the maximum output channel for Rev. A using the exposure configuration that results in the highest SAR for that RF channels in Rev. 0.[17] Head SAR is required for Ev-Do devices that support operations next to the ear; for example, with VOIP, using Subtype 2 Physical Layer configurations according to the required handset test configurations.[18]

1x RTT Support

For Ev-Do devices that also support 1x RTT voice and/or data operations, SAR is not required for 1x RTT when the maximum average output of each channel is less than ¼ dB higher than that measured in Subtype 0/1 Physical Layer configurations for Rev. 0. Otherwise, the 'Body SAR Measurements' procedures in the 'CDMA 2000 1x Handsets' section should be applied.

[17] The highest body SAR measured in Antenna Extended & Retracted configurations for a channel in Rev. 0. The possible channels are the High, Middle & Low channel.

[18] SAR is measured on the left & right side, in touch & tilt positions with antenna extended and retracted, on the High, Middle & Low channels.

WCDMA Handsets

The following procedures are applicable to WCDMA handsets operating under 3GPP Release 99, Release 5 and Release 6.[19] The default test configuration is to measure SAR with an established radio link between the DUT and a communication test set using a 12.2 kbps RMC (reference measurement channel) configured in Test Loop Mode 1. SAR is selectively confirmed for other physical channel configurations (DPCCH & $DPDCH_n$), HSDPA and HSPA (HSUPA/HSDPA) modes according to output power, exposure conditions and device operating capabilities. Both uplink and downlink should be configured with the same RMC or AMR, when required. SAR for Release 5 HSDPA and Release 6 HSPA are measured using the applicable FRC (fixed reference channel) and E-DCH reference channel configurations. Maximum output power is verified according to applicable versions of 3GPP TS 34.121 and SAR must be measured according to these maximum output conditions. When Maximum Power Reduction (MPR) is not implemented according to Cubic Metric (CM) requirements for Release 6 HSPA, the following procedures do not apply.[20]

Output Power Verification

Maximum output power is verified on the High, Middle and Low channels according to the procedures described in section 5.2 of 3GPP TS 34.121, using the appropriate RMC or AMR with TPC (transmit power control) set to all "1's" for WCDMA/HSDPA or applying the required inner loop power control procedures to maintain maximum output power while HSUPA is active. Results for all applicable physical channel configurations (DPCCH, $DPDCH_n$ and spreading codes, HSDPA, HSPA) should be tabulated in the SAR report. All configurations that are not supported by the DUT or cannot be measured due to technical or equipment limitations should be clearly identified.[21]

Head SAR Measurements

SAR for head exposure configurations in voice mode is measured using a 12.2 kbps RMC with TPC bits configured to all "1's". SAR in AMR configurations is not required when the maximum average output of each RF channel for 12.2 kbps AMR is less than ¼ dB higher than that measured in 12.2 kbps RMC. Otherwise, SAR is measured on the maximum output channel in 12.2 kbps AMR with a 3.4 kbps SRB (signaling radio bearer) using the exposure configuration that results in the highest SAR in 12.2 kbps RMC for that RF channel.[22]

---

[19] Additional considerations are necessary for Release7 or higher, which may require case-by-case considerations until procedures are available.

[20] Contact the FCC Laboratory for measurement requirements and filing restrictions.

[21] Contact the FCC Laboratory for recommendations on measurement or equipment difficulties before conducting the measurements.

[22] The highest head SAR measured for the left & right side, in touch & tilt positions with antenna extended and retracted on a channel in 12.2 kbps RMC. The possible channels are the High, Middle & Low channel.

Body SAR Measurements

SAR for body exposure configurations in voice and data modes is measured using a 12.2 kbps RMC with TPC bits configured to all "1's". SAR for other spreading codes and multiple $DPDCH_n$, when supported by the DUT, are not required when the maximum average output of each RF channel, for each spreading code and $DPDCH_n$ configuration, are less than ¼ dB higher than those measured in 12.2 kbps RMC. Otherwise, SAR is measured on the maximum output channel with an applicable RMC configuration for the corresponding spreading code or $DPDCH_n$ using the exposure configuration that results in the highest SAR with 12.2 kbps RMC.[23] When more than 2 $DPDCH_n$ are supported by the DUT, it may be necessary to configure additional $DPDCH_n$ for a DUT using FTM (Factory Test Mode) or other chipset based test approaches with parameters similar to those used in 384 kbps and 768 kbps RMC.[24]

Handsets with Release 5 HSDPA

Body SAR is not required for handsets with HSDPA capabilities when the maximum average output of each RF channel with HSDPA active is less than ¼ dB higher than that measured without HSDPA using 12.2 kbps RMC and the maximum SAR for 12.2 kbps RMC is ≤ 75% of the SAR limit.[25] Otherwise, SAR is measured for HSDPA, using the ***additional*** body SAR procedures in the "Release 5 HSDPA Data Devices" section of this document, on the maximum output channel with the body exposure configuration that results in the highest SAR in 12.2 kbps RMC for that RF channel.[23] Handsets with both HSDPA and HSUPA should be tested according to Release 6 HSPA test procedures.

Handsets with Release 6 HSPA (HSDPA/HSUPA)

Body SAR is not required for handsets with HSPA capabilities when the maximum average output of each RF channel with HSUPA/HSDPA active is less than ¼ dB higher than that measured without HSUPA/HSDPA using 12.2 kbps RMC and the maximum SAR for 12.2 kbps RMC is ≤ 75% of the SAR limit.[22] Otherwise, SAR is measured for HSPA using the ***additional*** body SAR procedures in the "Release 6 HSPA Data Devices" section of this document, on the maximum output channel with the body exposure configuration that results in the highest SAR in 12.2 kbps RMC for that RF channel.[23] When VOIP is applicable for head exposure in HSPA, SAR is not required when the maximum output of each RF channel with HSPA is less than ¼ dB higher than that measured using 12.2 kbps RMC; otherwise, the same HSPA configuration used for body measurements should be tested for head exposure.

---

[23] The highest body SAR measured in Antenna Extended & Retracted configurations on a channel in 12.2 kbps RMC. The possible channels are the High, Middle & Low channel.

[24] The highest data rate defined for RMC is 768 kbps, which contains 2 $DPDCH_n$. When a communication test set is not used, consult with the FCC Laboratory on applicable test setup requirements.

[25] HSDPA is tested with FRC. See 'Release 5 HSDPA Data Devices' (next section) and Appendix D on output power measurement and FRC configurations requirements.

Release 5 HSDPA Data Devices

The following procedures are applicable to HSDPA data devices operating under 3GPP Release 5.[26] Body exposure conditions are typically required for these devices, including handsets and data modems operating in various electronic devices. HSDPA operates in conjunction with WCDMA and requires an active DPCCH. The default test configuration is to measure SAR in WCDMA without HSDPA, with an established radio link between the DUT and a communication test set using a 12.2 kbps RMC (reference measurement channel) configured in Test Loop Mode 1. SAR for HSDPA is selectively measured using the highest SAR configuration in WCDMA with an FRC (fixed reference channel) in H-set 1 and a 12.2 kbps RMC.[27] SAR is selectively confirmed for other physical channel configurations (DPCCH & $DPDCH_n$) according to output power, exposure conditions and device operating capabilities. Maximum output power is verified according to the applicable versions of 3GPP TS 34.121 and SAR must be measured according to these maximum output conditions. The DUT must be tested according to its UE Category and explained in the SAR report.

Output Power Verification

Maximum output power is verified on the High, Middle and Low channels according to the Release 5 procedures described in section 5.2 of 3GPP TS 34.121, using an FRC with H-set 1 and a 12.2 kbps RMC with TPC (transmit power control) set to all "1's". When HSDPA is active output power is measured according requirements for HS-DPCCH Sub-test 1 - 4.[28] Results for all applicable physical channel configurations (DPCCH, $DPDCH_n$ and spreading codes, HS-DPCCH etc.), with and without HSDPA active, should be tabulated in the SAR report. All configurations that are not supported by the DUT or cannot be measured due to technical or equipment limitations should be clearly identified in the SAR report.[29]

SAR Measurements

When voice transmission and head exposure conditions are applicable to a WCDMA/HSDPA data device, head exposure is measured according to the 'Head SAR Measurements' procedures in the 'WCDMA Handsets' section of this document. SAR for body exposure configurations is measured according to the 'Body SAR Measurements' procedures of that section. In *addition*, body SAR is also measured for HSDPA when the maximum average output of each RF channel with HSDPA active is at least ¼ dB higher than that measured without HSDPA using 12.2 kbps RMC or the maximum SAR for 12.2 kbps RMC is above 75% of the SAR limit.[30] Body SAR for HSDPA is measured using an FRC with H-Set 1 in Sub-test 1 and a 12.2 kbps RMC

[26] Due to Cubic Metric (CM) and Maximum Power Reduction (MPR) requirements, Release 6 HSPA devices should be tested according to Release 6 HSPA configurations and procedures.
[27] HSDPA is a primary mode of operation for data devices; SAR is selectively verified according to SAR levels.
[28] See TS 34.121 Tables C.10.1 – C.10.4 for setup requirements.
[29] Contact the FCC Laboratory for recommendations on measurement or equipment difficulties before conducting measurements.
[30] Contact the FCC Laboratory for test and approval requirements if the maximum output power measured in HS-DPCCH Sub-test 2 – 4 is higher than Sub-test 1.

configured in Test Loop Mode 1, using the highest body SAR configuration in 12.2 kbps RMC without HSDPA.[31]

HSDPA should be configured according to the UE category of a test device. The number of HS-DSCH/HS-PDSCHs, HARQ processes, minimum inter-TTI interval, transport block sizes and RV coding sequence are defined by the H-set. To maintain a consistent test configuration and stable transmission conditions, QPSK is used in the H-set for SAR testing. HS-DPCCH should be configured with a CQI feedback cycle of 4 ms with a CQI repetition factor of 2 to maintain a constant rate of active CQI slots. DPCCH and DPDCH gain factors(β_c, β_d), and HS-DPCCH power offset parameters (Δ_{ACK}, Δ_{NACK}, Δ_{CQI}) should be set according to values indicated in the Table below.[32] The CQI value is determined by the UE category, transport block size, number of HS-PDSCHs and modulation used in the H-set.[33]

Sub-Test 1 Setup for Release 5 HSDPA

Sub-test	β_c	β_d	β_d *(SF)*	β_c/β_d	β_{hs} (1)	CM (dB)(2)
1	2/15	15/15	64	2/15	4/15	0.0
2	12/15(3)	15/15(3)	64	12/15(3)	24/15	1.0
3	15/15	8/15	64	15/8	30/15	1.5
4	15/15	4/15	64	15/4	30/15	1.5

Note 1: Δ_{ACK}, Δ_{NACK} and Δ_{CQI} = 8 $\Leftrightarrow$ $A_{hs} = \beta_{hs}/\beta_c$ = 30/15 $\Leftrightarrow$ β_{hs}= 30/15 *β_c
Note 2: CM = 1 for β_c/β_d =12/15, β_{hs}/β_c=24/15.
Note 3: For subtest 2 the β_c/β_d ratio of 12/15 for the TFC during the measurement period (TF1, TF0) is achieved by setting the signaled gain factors for the reference TFC (TF1, TF1) to β_c = 11/15 and β_d = 15/15.

[31] The highest body SAR measured in Antenna Extended & Retracted configurations on a channel in 12.2 kbps RMC. The possible channels are the High, Middle & Low channel. The β values for 12.2 kbps RMC is set according to Table C.10.1.4 of TS 34.121; also see Table C.10.1.1.

[32] In order to achieve maximum output, $\beta_c/\beta_d < 1$ should be maintained to avoid triggering any power setback required by higher β ratios.

[33] Many of the operating parameters are automatically checked and set by a communication test set to ensure there is no conflict in the HS-DPCCH setup. In addition to the specific uplink HSDPA parameters, many of the downlink parameters that do not affect UE transmitter operations must also be set accordingly to ensure proper HSDPA operation. See Annex C.10.1, C.8.1.1 and Table C.10.1.4 of TS 34.121 for HSDPA setup requirements.

Release 6 HSPA Data Devices

The following procedures are applicable to HSPA (HSUPA/HSDPA) data devices operating under 3GPP Release 6.[34] Body exposure conditions generally apply to these devices, including handsets and data modems operating in various electronic devices. HSUPA operates in conjunction with WCDMA and HSDPA. SAR is initially measured in WCDMA test configurations without HSPA. The default test configuration is to establish a radio link between the DUT and a communication test set to configure a 12.2 kbps RMC (reference measurement channel) in Test Loop Mode 1. SAR for HSPA is selectively measured with HS-DPCCH, E-DPCCH and E-DPDCH, all enabled, along with a 12.2 kbps RMC using the highest SAR configuration in WCDMA with 12.2 kbps RMC only.[35] An FRC is configured according to HS-DPCCH Sub-test 1 using H-set 1 and QPSK.[36] HSPA is configured according to E-DCH Sub-test 5 requirements. SAR for other HSPA sub-test configurations is also confirmed selectively according to output power, exposure conditions and E-DCH UE Category. Maximum output power is verified according to procedures in applicable versions of 3GPP TS 34.121 and SAR must be measured according to these maximum output conditions. The UE Categories for HS-DPCCH and HSPA should be clearly identified in the SAR report. The following procedures are applicable only if Maximum Power Reduction (MPR) is implemented according to Cubic Metric (CM) requirements.[37]

Output Power Verification

Maximum output power is verified on the High, Middle and Low channels according to Release 6 procedures in section 5.2 of 3GPP TS 34.121, using the appropriate RMC, FRC and E-DCH configurations. When E-DCH is not active, TPC (transmit power control) is set to all "1's"; otherwise, inner loop power control with power control algorithm 2 is required to maintain E-TFCI requirements. When HSPA is active output power for the applicable HSPA modes should be measured for E-DCH Sub-test 1 - 5.[38] Results for all applicable physical channel configurations (DPCCH, DPDCH and spreading codes, HS-DPCCH, E-DPCCH, E-DPDCH$_k$) should be tabulated in the SAR report. All configurations that are not supported by the DUT or cannot be measured due to technical or equipment limitations should be clearly identified.[39]

[34] Test conditions and requirements should be established according to procedures in applicable versions of 3GPP documents, including TS 34.108, TS 34.109 and TS 34.121 etc. Additional considerations are necessary for Release 7 or higher; therefore, case-by-case considerations are required until procedures are available.
[35] HSPA should be configured according to the HSDPA and HSUPA UE categories of the test device.
[36] See TS 34.121 Tables C.10.1 – C.10.4 for setup requirements.
[37] Otherwise, contact the FCC Laboratory for measurement requirements and filing restrictions.
[38] Applicable HSPA modes are determined by the E-DCH UE category. Test supported modes only.
[39] Contact the FCC Laboratory for recommendations on measurement or equipment difficulties before conducting measurements.

SAR Measurements

When voice transmission and head exposure conditions are applicable to a WCDMA/HSPA data device, head exposure is measured according to the 'Head SAR Measurements' procedures in the 'WCDMA Handsets' section of this document. SAR for body exposure configurations are measured according to the 'Body SAR Measurements' procedures in the 'WCDMA Handsets' section of this document. In *addition*, body SAR is also measured for HSPA when the maximum average output of each RF channel with HSPA active is at least ¼ dB higher than that measured without HSPA using 12.2 kbps RMC or the maximum SAR for 12.2 kbps RMC is above 75% of the SAR limit. Body SAR for HSPA is measured with E-DCH Sub-test 5, using H-Set 1 and QPSK for FRC and a 12.2 kbps RMC configured in Test Loop Mode 1 with power control algorithm 2, according to the highest body SAR configuration in 12.2 kbps RMC without HSPA.[40] When VOIP is applicable for head exposure, SAR is not required when the maximum output of each RF channel with HSPA is less than ¼ dB higher than that measured using 12.2 kbps RMC; otherwise, the same HSPA configuration used for body measurements should be used to test for head exposure.

Due to inner loop power control requirements in HSPA, a commercial communication test set should be used for the output power and SAR tests.[41] The 12.2 kbps RMC, FRC H-set 1 and E-DCH configurations for HSPA should be configured according to the β values indicated below as well as other applicable procedures described in the 'WCDMA Handset' and 'Release 5 HSDPA Data Devices' sections of this document.

Sub-test	β_c	β_d	β_d (SF)	β_c/β_d	β_{hs} (1)	β_{ec}	β_{ed}	β_{ed} (SF)	β_{ed} (codes)	CM (2) (dB)	MPR (dB)	AG (4) Index	E-TFCI
1	11/15 (3)	15/15 (3)	64	11/15 (3)	22/15	209/225	1039/225	4	1	1.0	0.0	20	75
2	6/15	15/15	64	6/15	12/15	12/15	94/75	4	1	3.0	2.0	12	67
3	15/15	9/15	64	15/9	30/15	30/15	β_{ed1}: 47/15 β_{ed2}: 47/15	4	2	2.0	1.0	15	92
4	2/15	15/15	64	2/15	4/15	2/15	56/75	4	1	3.0	2.0	17	71
5	15/15 (4)	15/15 (4)	64	15/15 (4)	30/15	24/15	134/15	4	1	1.0	0.0	21	81

Note 1: Δ_{ACK}, Δ_{NACK} and Δ_{CQI} = 8 ⇔ $A_{hs} = \beta_{hs}/\beta_c$ = 30/15 ⇔ β_{hs}= 30/15 *β_c.
Note 2: CM = 1 for β_c/β_d =12/15, β_{hs}/β_c=24/15. For all other combinations of DPDCH, DPCCH, HS- DPCCH, E-DPDCH and E-DPCCH the MPR is based on the relative CM difference.
Note 3: For subtest 1 the β_c/β_d ratio of 11/15 for the TFC during the measurement period (TF1, TF0) is achieved by setting the signaled gain factors for the reference TFC (TF1, TF1) to β_c = 10/15 and β_d = 15/15.
Note 4: For subtest 5 the β_c/β_d ratio of 15/15 for the TFC during the measurement period (TF1, TF0) is achieved by setting the signaled gain factors for the reference TFC (TF1, TF1) to β_c = 14/15 and β_d = 15/15.
Note 5: Testing UE using E-DPDCH Physical Layer category 1 Sub-test 3 is not required according to TS 25.306 Table 5.1g.
Note 6: β_{ed} can not be set directly; it is set by Absolute Grant Value.

[40] The highest body SAR measured in Antenna Extended & Retracted configurations on a channel in 12.2 kbps RMC. The possible channels are the High, Middle & Low channel. Contact the FCC Laboratory for test and approval requirements if the maximum output power measured in E-DCH Sub-test 2 – 4 is higher than Sub-test 5.
[41] When test mode must be used, contact the FCC Laboratory for measurement requirements and filing restrictions.

APPENDIX A: CDMA 2000 Transmitter Configuration Info

The operating parameters for CDMA 2000 uplink and downlink are defined by different Radio Configurations (RC). Test Modes are defined to enable valid combinations of uplink and downlink RC pairs for device testing. Loopback Service Options (See 3GPP2 C.S0013), Test Data Service Options (See 3GPP2 C.S0026) and Packet Data Service Options (See 3GPP2 C.S0017) are used to configure test devices in each RC. Different Multiplex Options are required in each Service Options (SO) for testing using Loopback and Test Data Services.

RC1 & RC2 are IS-95 compatible. RC3 – RC4/RC5 require CDMA 2000 1x (single carrier). Mobile stations (MS) may transmit using RC1 - RC4 in the uplink. Basestations (BS) may transmit using RC1 - RC5 in the downlink. The test device and associated equipment must be configured according to the defined uplink/downlink RC, SO and Multiplex Option requirements to establish a communication link for SAR testing. 1x MS are typically capable of transmitting in RC1 - RC4 according to network/carrier requirements. The channel structure and configuration requirements described in 3GPP2 standards are summarized in the following for test device (MS) and equipment (BS) set up considerations. The relevant 3GPP2 standards documents are available for download at:
http://www.3gpp2.org/Public_html/specs/alltsgscfm.cfm.

Simultaneous voice and data is applicable to 1x connections through multiple code channels; especially for devices operating according to CDMA 2000 Rev. A (P_REV 7) and Ev-Do Rev A. Devices that support both CDMA 2000 and Ev-Do connectivity may roam between networks to optimize data performance. When the same RF components and transmitter paths are used for both CDMA 2000 and Ev-Do, a reduced set of test configurations may be justified for evaluating SAR compliance.

The test protocols used to evaluate 1x handsets and data modems for SAR compliance must address both the operating configurations and exposure conditions of the MS. The exact test procedures may vary among test laboratories due to differences in test equipment setup, which are generally acceptable, provided the procedures are equivalent and test results are always consistent. 1x MS may operate with multiple code channels for voice and data calls. The maximum average output power for each applicable operating/exposure configuration should be determined according to the operating capabilities of an individual MS. The output of active code channels should be verified with code domain power measurements to ensure the code channel power levels/ratios are within specifications. The MS is normally activated with a communication test set, according to defined call setup and processing requirements, to establish the required radio link for SAR testing. The relevant parameters for both uplink and downlink should be documented to the extent that would enable tests to be repeated with minimal difficulties using similar equipment.

Device test configurations used for SAR measurements can be derived from the applicable 3GPP2 and TIA standards. The maximum output power measurement procedures described in section 4.4.5 of 3GPP2 C.S0011 and TIA-98-E should be used to verify output power for SAR

evaluation. Test reports should include detail descriptions to identify MS operating capabilities and test setup configurations. The rationale for testing a device in selected Test Modes, Radio Configurations, Service Options and Multiplex Options etc. should be clearly explained, including the relevant parameters used to setup the equipment and test device.

Terms & Definitions

1x RTT - Single carrier Radio Transmission Technology.

Radio Configuration - A set of Forward Traffic Channel and Reverse Traffic Channel transmission formats characterized by physical layer parameters, such as data rates, modulation characteristics and spreading rate.

Reverse Traffic Channel - A traffic channel on which data and signaling are transmitted from a mobile station to a base station. For Radio Configurations 1 and 2, the Reverse Traffic Channel is composed of a Reverse Fundamental Channel and up to seven Reverse Supplemental Code Channels. For Radio Configurations 3 through 6, the Reverse Traffic Channel is composed of a Reverse Fundamental Channel, a Reverse Dedicated Control Channel, or both and up to two Reverse Supplemental Channels.

Reverse Fundamental Channel - A portion of a Reverse Traffic Channel which carries higher-level data and control information from a mobile station to a base station.

Reverse Supplemental Channel - A portion of a Radio Configuration 3 through 6 Reverse Traffic Channel which operates in conjunction with the Reverse Fundamental Channel or the Reverse Dedicated Control Channel in that Reverse Traffic Channel to provide higher data rate services, and on which higher-level data is transmitted.

Reverse Supplemental Code Channel - A portion of a Radio Configuration 1 and 2 Reverse Traffic Channel which operates in conjunction with the Reverse Fundamental Channel in that Reverse Traffic Channel, and (optionally) with other Reverse Supplemental Code Channels to provide higher data rate services, and on which higher-level data is transmitted.

(Table is for information only, consult latest 3GPP2 standards for details)

RC	1x	3x
uplink	1 - 4	5 - 6
downlink	1 – 5	6 - 9

Reverse Channel Radio Configuration														
		RC1	RC2	RC3		RC4	RC5		RC6		RC7		
Spreading Rate (SR)		1	1	1		1	3		3		1		
Rate Set, bps (R-FCCH)		IS-95 low data rate compatible 1200, 2400, 4800, 9600	IS-95 high data rate compatible 1800, 3600,7200, 14400	1200, 1350, 1500, 2400, 2700, 4800, 9600, 19200, 38400, 76800, 153600	307200 1x uplink max rate	1800, 3600, 7200, 14400, 28800, 57600, 115200, 230400	12500, 1350, 1500, 2400, 2700, 4800, 9600, 19200, 38400, 76800, 153600	307200, 614400	1800, 3600, 7200, 14400, 28800, 57600, 115200, 230400, 460800	1036800 3x uplink max rate	19200, 40800, 79200	156000, 309600, 463200, 616800, 924000, 1231200, 1538400	1845600 Ev-DV uplink max rate
Code Rate		1/3	1/2	1/4	1/2	1/4	1/4	1/3	1/4	1/2	sub packet data rate 1/5		
Modulation		64-ray orthogonal	64-ray orthogonal	BPSK + pilot		BPSK + pilot	BPSK + pilot		BPSK + pilot		BPSK + pilot	QPSK + 1 or 2 pilots	8-PSK + 1 or 2 pilots
Loop Back Service Option (P_REV)	SO2 (≤ 5)	Mux Opt 1 FCCH											
	SO9 (≤ 5)		Mux Opt 2 FCCH										
	SO30 (≤ 5)	Mux Opt 3: FSCCH 1: RSCCH											
	SO31 (≤ 5)		Mux Opt 4: FSCCH 2: RSCCH										
	SO55 (≥ 6)	Mux Opt 1 (SO 2) F/R-FCCH	Mux Opt 2 (SO 9) F/R-FCCH	Mux Opt 1 (SO 2) F/R-FCCH		Mux Opt 1 (SO 2) F-FCCH Mux Opt 2 (SO 9) R-FCCH	Mux Opt 1 (SO 2) R-FCCH Mux Opt 2 (SO 9) F-FCCH		Mux Opt 1 (SO 2) F-FCCH Mux Opt 2 (SO 9) R-FCCH		Mux Opt 1 (SO 2) F-FCCH		
Test Data Service Option	SO32	Mux Opt 1 F/R-FCH/DCCH	Mux Opt 2 F/R-FCH/DCCH	Mux Opt 1 F/R-FCH/DCCH		Mux Opt 1 F-FCH-DCCH Mux Opt 2 R-FCH-DCCH	Mux Opt 1 R-FCH-DCCH Mux Opt 2 F-FCH-DCCH		Mux Opt 1 F-FCH-DCCH Mux Opt 2 R-FCH-DCCH		Mux Opt 1 F-FCH/DCCH		
				F/R-SCH		F/R-SCH	F/R-SCH		F/R-SCH		F-SCH		

Reverse Link Architecture and Channel Structures

The Reverse/Uplink architecture, channel structure and channel configurations are illustrated in the attachments below.[42]

Uplink Architecture

Uplink Channe Structure

Channel Configuration

Logical and Physical Channel assignments

A logical channel name consists of three lower case letters followed by "ch" (channel). A hyphen is used after the first letter as shown in the Table below. For example, the logical channel name for the Forward Dedicated Traffic Channel is f-dtch.

Naming Conventions for Logical Channels		
First Letter	**Second Letter**	**Third letter**
f = Forward **r** = Reverse	**d** = Dedicated **c** = Common	**t** = Traffic **s** = Signaling

Physical channels are represented by upper case abbreviations. As in the case of logical channels, the first letters in the names of the channels indicate the direction of the channel (i.e., forward or reverse) and is followed by a hyphen. The Table below identifies the names and meanings of all the physical channels designated in CDMA 2000. The notations "F/R" and "Forward/Reverse" represent two different physical channels (i.e., one forward channel and one reverse channel). For example, the physical channel name for the Forward Fundamental Channel is F-FCH.

Physical Channel Names	
Channel Name	**Physical Channel**
F/R-FCH	Forward/Reverse Fundamental Channel
F/R-DCCH	Forward/Reverse Dedicated Control Channel
F/R-SCCH	Forward/Reverse Supplemental Code Channel
F/R-SCH	Forward/Reverse Supplemental Channel
F-PCH	Paging Channel
F-QPCH	Quick Paging Channel
R-ACH	Access Channel
F/R-CCCH	Forward/Reverse Common Control Channel
F/R-PICH	Forward/Reverse Pilot Channel
F-APICH	Dedicated Auxiliary Pilot Channel
F-TDPICH	Transmit Diversity Pilot Channel
F-ATDPICH	Auxiliary Transmit Diversity Pilot Channel
F-SYNCH	Sync Channel
F-CPCCH	Common Power Control Channel

[42] These are embedded PDF files. Double click on the icon to open a file.

F-CACH	Common Assignment Channel
R-EACH	Enhanced Access Channel
F-BCCH	Broadcast Control Channel
F-PDCH	Forward Packet Date Channel
F-PDCCH	Forward Packet Data Control Channel
R-ACKCH	Reverse Acknowledgement Channel
R-CQICH	Reverse Channel Quality Indicator Channel
F-ACKCH	Forward Acknowledgement Channel
F-GCH	Forward Grant Channel
F-RCCH	Forward Rate Control Channel
R-PDCH	Reverse Packet Data Channel
R-PDCCH	Reverse Packet Data Control Channel
R-REQCH	Reverse Request Channel

Reverse Fundamental Channel

The Reverse Fundamental Channel is used for the transmission of user and signaling information to the base station during a call. The Reverse Traffic Channel may contain up to one Reverse Fundamental Channel.

Reverse Supplemental Channel

The Reverse Supplemental Channel applies to Radio Configurations 3 through 6 only. The Reverse Supplemental Channel is used for the transmission of higher-level data to the base station during a call. The Reverse Traffic Channel contains up to two Reverse Supplemental Channels.

Reverse Supplemental Code Channel

The Reverse Supplemental Code Channel applies to Radio Configurations 1 and 2 only. The Reverse Supplemental Code Channel is used for the transmission of higher-level data to the base station during a call. The Reverse Traffic Channel contains up to seven Reverse Supplemental Code Channels.

Reverse Packet Data Channel

The Reverse Packet Data Channel is used for the transmission of higher-level data to base stations by mobile stations operating with Spreading Rate 1.

The maximum number of channels that can be transmitted by each mobile station for each channel type in the reverse link for spreading rate 1 is specified in the Table below.

Channel Type	Maximum Number
Reverse Pilot Channel	1
Reverse Secondary Pilot Channel	1
Access Channel	1
Enhanced Access Channel	1
Reverse Common Control Channel	1
Reverse Packet Data Control Channel	1
Reverse Request Channel	1

Channel Type	Maximum Number
Reverse Dedicated Control Channel	1
Reverse Acknowledgment Channel	1
Reverse Channel Quality Indicator Channel	1
Reverse Fundamental Channel	1
Reverse Supplemental Code Channel (RC 1 and 2 only)	7
Reverse Supplemental Channel (RC 3 and 4 only)	2
Reverse Packet Data Channel (RC 7 only)	1

Orthogonal Spreading

When transmitting on the Reverse Pilot Channel, the Reverse Secondary Pilot Channel, the Enhanced Access Channel, the Reverse Common Control Channel, the Reverse Packet Data Control Channel, the Reverse Request Channel, the Reverse Acknowledgment Channel, the Reverse Channel Quality Indicator Channel, or the Reverse Traffic Channel with Radio Configuration 3 through 6, the mobile station shall use orthogonal spreading. The Walsh functions that are applied to the Reverse CDMA Channels are identified in the following Table.

Channel Type	Walsh Function
Reverse Pilot Channel	W_0^{64}
Reverse Secondary Pilot Channel	W_{32}^{64}
Enhanced Access Channel	W_2^8
Reverse Common Control Channel	W_2^8
Reverse Packet Data Control Channel	W_{48}^{64}
Reverse Request Channel	W_8^{16}
Reverse Dedicated Control Channel	W_8^{16}
Reverse Acknowledgment Channel	W_{16}^{64}
Reverse Channel Quality Indicator Channel	W_{12}^{16}
Reverse Fundamental Channel	W_4^{16}
Reverse Supplemental Channel 1	W_1^2or W_2^4
Reverse Supplemental Channel 2	W_2^4or W_6^8
Reverse Packet Data Channel	W_1^2, W_2^4, or both

In CDMA 2000, measurements are complicated by the fact that the length of the Walsh codes varies to accommodate the different data rates and spreading rates (SR) in the different RC. In general, as the data rate increases, the symbol period is shorter. For a specific SR, the final chip rate is constant. Therefore, fewer Walsh code chips are accommodated within the symbol period (the Walsh code length is shorter). See "Channel Configuration" attachment earlier for data/symbol rates and Walsh code/length assignments.

Forward CDMA Channel Signals and Radio Configurations

Radio Configuration Characteristics for the Forward CDMA Channel		
Radio Configuration	**Spreading Rate**	**Data Rates, Forward Error Correction, and General Characteristics**
1	1	1200, 2400, 4800, and 9600 bps data rates with R = 1/2, BPSK pre-spreading symbols
2	1	1800, 3600, 7200, and 14400 bps data rates with R = 1/2, BPSK pre-spreading symbols
3	1	1200, 1350, 1500, 2400, 2700, 4800, 9600, 19200, 38400, 76800, and 153600 bps data rates with R = 1/4, QPSK pre-spreading symbols, TD allowed
4	1	1200, 1350, 1500, 2400, 2700, 4800, 9600, 19200, 38400, 76800, 153600, and 307200 bps data rates with R = 1/2, QPSK pre-spreading symbols, TD and CCSH allowed
5	1	1800, 3600, 7200, 14400, 28800, 57600, 115200, and 230400 bps data rates with R = 1/4, QPSK pre-spreading symbols, TD and CCSH allowed
6	3	1200, 1350, 1500, 2400, 2700, 4800, 9600, 19200, 38400, 76800, 153600, and 307200 bps data rates with R = 1/6, QPSK pre-spreading symbols
7	3	1200, 1350, 1500, 2400, 2700, 4800, 9600, 19200, 38400, 76800, 153600, 307200, and 614400 bps data rates with R = 1/3, QPSK pre-spreading symbols
8	3	1800, 3600, 7200, 14400, 28800, 57600, 115200, 230400, and 460800 bps data rates with R = 1/4 (20 ms) or 1/3 (5 ms), QPSK pre-spreading symbols
9	3	1800, 3600, 7200, 14400, 28800, 57600, 115200, 230400, 259200, 460800, 518400, and 1036800 bps data rates with R = 1/2 (20 ms) or 1/3 (5 ms), QPSK pre-spreading symbols
10	1	43200, 81600, 86400, 158400, 163200, 172800, 312000, 316800, 326400, 465600, 619200, 624000, 633600, 772800, 931200, 1238400, 1248000, 1545600, 1862400 2476800, and 3091200 bps subpacket data rates with R = 1/5, QPSK, 8-PSK, or 16-QAM pre-spreading symbols (see 3GPP2 C.S0002 Table 3.1.3.1.14.4-1)

Reverse CDMA Channel Signals and Radio Configurations

Signals transmitted on the Reverse Traffic Channel (i.e., the Reverse Dedicated Control Channel, the Reverse Fundamental Channel, the Reverse Supplemental Channel, the Reverse Supplemental Code Channel, or the Reverse Packet Data Channel) are specified by radio configurations. There are seven radio configurations for the Reverse Traffic Channel.

Radio Configuration Characteristics for the Reverse CDMA Channel		
Radio Configuration	**Spreading Rate**	**Data Rates, Forward Error Correction, and General Characteristics**
1	1	1200, 2400, 4800, and 9600 bps data rates with R = 1/3, 64-ary orthogonal modulation
2	1	1800, 3600, 7200, and 14400 bps data rates with R = 1/2, 64-ary orthogonal modulation
3	1	1200, 1350, 1500, 2400, 2700, 4800, 9600, 19200, 38400, 76800, and 153600 bps data rates with R = 1/4, 307200 bps data rate with R = 1/2, BPSK modulation with a pilot
4	1	1800, 3600, 7200, 14400, 28800, 57600, 115200, and 230400 bps data rates with R = 1/4, BPSK modulation with a pilot
5	3	1200, 1350, 1500, 2400, 2700, 4800, 9600, 19200, 38400, 76800, and 153600 bps data rates with R = 1/4, 307200 and 614400 bps data rate with R = 1/3, BPSK modulation with a pilot
6	3	1800, 3600, 7200, 14400, 28800, 57600, 115200, 230400, and 460800 bps data rates with R = 1/4, 1036800 bps data rate with R = 1/2, BPSK modulation with a pilot
7	1	19200, 40800, and 79200 bps subpacket data rates with R = 1/5, BPSK modulation with a pilot; 156000, 309600, 463200, 616800, 924000, 1231200, and 1538400 bps subpacket data rates with R = 1/5, QPSK modulation with one or two pilots; and 1845600 bps subpacket data rate with R = 1/5, 8-PSK modulation with one or two pilots (See 3GPP2 C.S0002 Table 2.1.3.1.11.4-1)

Note: For Radio Configurations 3 - 6, the Reverse Dedicated Control Channel and Reverse Fundamental Channel also allow a 9600 bps, 5 ms format.

A mobile station shall support operation in Radio Configuration 1, 3, or 5. A mobile station may support operation on Radio Configuration 2, 4, 6, or 7. A mobile station supporting operation in Radio Configuration 2 shall support Radio Configuration 1. A mobile station supporting operation in Radio Configuration 4 shall support Radio Configuration 3. A mobile station supporting operation in Radio Configuration 6 shall support Radio Configuration 5. A mobile station shall not use Radio Configuration 1 or 2 simultaneously with Radio Configuration 3, 4, 5, 6, or 7 on the Reverse Traffic Channel.

If the mobile station supports the Forward Fundamental Channel with Radio Configuration 3 or 4, then it shall support the Reverse Fundamental Channel with Radio Configuration 3. If the mobile station supports the Forward Fundamental Channel with Radio Configuration 5, then it shall support the Reverse Fundamental Channel with Radio Configuration 4. If the mobile station supports the Forward Fundamental Channel with Radio Configuration 6 or 7, then it shall support the Reverse Fundamental Channel with Radio Configuration 3 or 5. If the mobile station supports the Forward Fundamental Channel with Radio Configuration 8 or 9, then it shall support the Reverse Fundamental Channel with Radio Configuration 4 or 6. (The same configurations apply to Forward and Reverse Dedicated Control Channel pairing)

If the mobile station supports the Forward Packet Data Channel with Radio Configuration 10, then it shall support either the Reverse Fundamental Channel, the Reverse Dedicated Control Channel, or both, with Radio Configuration 3. If the mobile station supports the Forward Packet Data Channel with Radio Configuration 10, then it may support the Reverse Fundamental Channel, the Reverse Dedicated Control Channel, or both, with Radio Configuration 4. If the mobile station supports the Forward Packet Data Channel with Radio Configuration 10, then it shall support the Reverse Acknowledgment Channel and the Reverse Channel Quality Indicator Channel. If the mobile station supports the Reverse Packet Data Channel with Radio Configuration 7, then it shall support the Reverse Acknowledgment Channel, the Reverse Channel Quality Indicator Channel, the Reverse Packet Data Control Channel, and the Reverse Request Channel.

Data Rates, Modulation and Channel Gain Parameters

The combinations of data rate, frame length and modulation parameters for the applicable code channels and Radio Configurations are specified in the attachments below (Data Rates & Modulation Parameters). Flexible data rates may be supported with Radio Configurations 3, 4, 5, and 6. Flexible data rate frame formats correspond to a range of data rates up to the highest dedicated channel data rate are listed in Table 2.1.3.1.3-1 and Table 2.1.3.1.3-2 (See Data Rates attachment). These non-listed data rates are called flexible data rates. The nominal gain attributes for different combinations of data rates, frame lengths and coding requirements are included in the attachment: Reverse Link Gain Table.

Data Rates

Modulation Parameters

Reverse Link Gain Table

<u>Reverse Fundamental Channel Time Alignment and Modulation Rates</u>

When operating with Radio Configuration 1, the mobile station shall transmit information on the Reverse Fundamental Channel at variable data rates of 9600, 4800, 2400, and 1200 bps.

When operating with Radio Configuration 2, the mobile station shall transmit information on the Reverse Fundamental Channel at variable data rates of 14400, 7200, 3600, and 1800 bps.

When operating with Radio Configurations 3 and 5, the mobile station shall transmit information on the Reverse Fundamental Channel at variable data rates of 9600, 4800, 2700, and 1500 bps during 20 ms frames or at 9600 bps during 5 ms frames. The mobile station may support flexible data rates. If flexible data rates are supported, the mobile station should support variable data rates corresponding to 1 to 171 information bits per

20 ms frame on the Reverse Fundamental Channel. The minimum number of flexible data rates used in variable rate operation is not specified.

When operating with Radio Configurations 4 and 6, the mobile station shall transmit information on the Reverse Fundamental Channel at variable data rates of 14400, 7200, 3600, and 1800 bps during 20 ms frames or at 9600 bps during 5 ms frames. If flexible data rates are supported, the mobile station should support variable rates corresponding to 1 to 268 information bits per 20 ms frame on the Reverse Fundamental Channel. The minimum number of flexible data rates used in variable rate operation is not specified.

Reverse Fundamental Channel frames with Radio Configurations 1 and 2 shall be 20 ms in duration. Reverse Fundamental Channel frames with Radio Configurations 3 through 6 shall be 5 or 20 ms in duration. The data rate and frame duration on a Reverse Fundamental Channel within a radio configuration shall be selected on a frame-by-frame basis. Although the data rate may vary on a frame-by-frame basis, the modulation symbol rate is kept constant by code repetition. A mobile station operating with Radio Configurations 3 through 6 may discontinue transmission of the Reverse Fundamental Channel for up to three 5 ms frames in a 20 ms frame.

Reverse Supplemental Channel Time Alignment and Modulation Rates

When transmitting on the Reverse Supplemental Channel with a single assigned data rate in Radio Configuration 3, the mobile station shall transmit information at fixed data rates of 307200, 153600, 76800, 38400, 19200, 9600, 4800, 2700, 2400, 1500, 1350, or 1200 bps.

When transmitting on the Reverse Supplemental Channel with a single assigned data rate in Radio Configuration 4, the mobile station shall transmit information at fixed data rates of 230400, 115200, 57600, 28800, 14400, 7200, 3600, or 1800 bps.

When transmitting on the Reverse Supplemental Channel with a single assigned data rate in Radio Configuration 5, the mobile station shall transmit information at a fixed data rate of 614400, 307200, 153600, 76800, 38400, 19200, 9600, 4800, 2700, 2400, 1500, 1350, or 1200 bps.

When transmitting on the Reverse Supplemental Channel with a single assigned data rate in Radio Configuration 6, the mobile station shall transmit information at a fixed data rate of 1036800, 518400, 460800, 259200, 230400, 115200, 57600, 28800, 14400, 7200, 3600, or 1800 bps.

When using variable-rate transmission on the Reverse Supplemental Channel with multiple assigned data rates in Radio Configurations 3, 4, 5, and 6, the mobile station shall

- Transmit information at the maximal assigned data rate, or

- Transmit information at the other assigned data rates with the same modulation symbol rate as that of the maximal assigned data rate. To achieve a higher modulation symbol rate, repetition or puncturing is applied to the specified data rate.

If the mobile station supports the Reverse Supplemental Channel, the mobile station shall support Reverse Supplemental Channel frames that are 20 ms in duration. The mobile station may support Reverse Supplemental Channel frames that are 40 or 80 ms in duration. The mobile station may support discontinuous transmission of Reverse Supplemental Channel frames.

Reverse Supplemental Code Channel Time Alignment and Modulation Rates

When transmitting on Reverse Supplemental Code Channels with Radio Configuration 1, the mobile station shall transmit information at 9600 bps. When transmitting on Reverse Supplemental Code Channels with Radio Configuration 2, the mobile station shall transmit information at 14400 bps. The Reverse Supplemental Code Channel frame shall be 20 ms in duration. The mobile station shall transmit Reverse Supplemental Code Channels within 3/8 of a PN chip (305.1758 ns) of the Reverse Fundamental Channel.

For Radio Configuration 1, each frame of the Reverse Supplemental Code Channel preamble shall consist of 192 zeros that are transmitted at the 9600 bps rate. For Radio Configuration 2, each frame of the Reverse Supplemental Code Channel Discontinuous Transmission preamble shall consist of 288 zeros that are transmitted at the 14400 bps rate.

Reverse Packet Data Channel Structure, Time Alignment and Modulation Rates (Ev-Dv)

The Reverse Packet Data Channel shall transmit 174, 386, 770, 1538, 3074, 4610, 6146, 9218, 12290, 15362, or 18434 information bits. Frame quality indicator and encoder tail bits shall be appended to the information bits as specified in Reverse Packet Data Channel Encoder Packet Structure (2.1.3.15.2 of 3GPP2 C.S0002) to form encoder packets. The encoder packets shall be encoded with a rate 1/5 turbo encoder and interleaved. The symbols from the interleaved sequence shall then be selected for transmission as a subpacket as specified in Subpacket Symbol Selection for the Reverse Packet Data Channel (2.1.3.1.10 of 3GPP2 C.S0002). The selected subpacket symbols shall be modulated into BPSK, QPSK, or 8-PSK symbols. For encoder packet sizes of 192, 408, 792, or 1560 bits, the modulated symbols shall be spread with a 4-chip Walsh function. For an encoder packet size of 3096 bits, the modulated symbols shall be spread with a 2-chip Walsh function. For encoder packet sizes of 4632, 6168, 9240, 12312, 15384, or 18456 bits, the modulated symbols shall be sequence demultiplexed and Walsh processed as specified in Sequence Demultiplexing and Walsh Processing for the Reverse Packet Data Channel (2.1.3.1.12 of 3GPP2 C.S0002).

If the mobile station supports the Reverse Packet Data Channel with Radio Configuration 7, the mobile station shall support encoder packet sizes of 192, 408, 792, 1560, 3096, 4632, 6168, 9240, and 12312 bits. If the mobile station supports the Reverse Packet Data

Channel with Radio Configuration 7, the mobile station may support encoder packet sizes of 15384 or 18456 bits. If the mobile station supports an encoder packet size of 18456 bits, the mobile station shall support an encoder packet size of 15384 bits.

An encoder packet shall be transmitted using from one to three 10-ms subpackets. A Reverse Packet Data Channel frame starts only when System Time is an integral multiple of 10 ms (See System Time Line in Figure 1.3-1 of 3GPP2 C.S0002), and may be offset from the frames of the Reverse Traffic Channels operating with Radio Configuration 3 and 4 as specified in 3GPP2 C.S0003. The selected symbols for each subpacket of the encoder packet will be different, but the modulation and Walsh spreading shall be the same for all of the subpackets of an encoder packet.

The subpacket data rates shall be from 19.2 kbps to 1.8456 Mbps, as given in Table 2.1.3.1.3-1 of above attachment on Date Rates.

Service Option Number Assignments

The CDMA 2000 specifications support the concept of service options on both the control and the traffic channels. Service options allow various voice and non-voice services to be defined and to be specified independently within the confines of the physical layer and the multiplex sub-layer interface. Each service option is identified by a unique service option number to facilitate proper processing within the network and mobile stations. Service option numbers may be used for standard services, as well as for proprietary (non- standard) services.

Standard Service Option Number Assignments

Table 3.1-1 (attachment below) shows the service option number assignments that have been made and approved in existing 3GPP2 publications. It also identifies the service option group for each service option that has been assigned to a service option group.

Proprietary Service Option Number Assignments

Table 3.2-1 (attachment below) shows the proprietary service option number assignments made and approved in existing 3GPP2 publications. The Proprietary Indicator of proprietary service option numbers is set to '1'. An 'x' represents either a zero or a one.

Table 3.1-1

Table 3.2-1

Service Option 2, 9, 30, 31, 55

General Description

The Loopback service options allow for simultaneous normal operation of signaling messages and secondary traffic. Service Options 2, 9, 30, 31, and 55 are defined in 3GPP2 C.S0013.

Service Option 2 and 9 allow testing of the Fundamental Code Channel for systems with RC 1 and RC 2, respectively. Service Option 30 and 31 allow testing of the Forward Supplemental Code Channel for systems with RC 1 and RC 2, respectively.

Service Option 55 allows testing of the Fundamental Channel for systems with all radio configurations, and with P_REV equal to 6 or higher. Based on the service option number 55 and the preferred RC indicated during call set-up, the correct multiplex option can be derived without ambiguity. When Service Option 55 is used with Multiplex Option 0x01, most of the mobile station procedures for Service Option 2 apply. When Service Option 55 is used with Multiplex Option 0x02, most of the mobile station procedures for Service Option 9 apply.

These service options provide a loopback of primary traffic information bits through the mobile station. These service options provide the means for a base station to supply a known data stream on both the Forward and Reverse Traffic Channels so that mobile station receiving and transmitting performance can be measured. In addition, these service options provide a convenient means of setting up calls and generating traffic for system testing. Specifically, these service options are used in some of the tests specified in 3GPP2 C.S0010 and C.S0011.

For each Forward Traffic Channel frame, the base station generates and sends one or more primary data blocks to the mobile station, consisting of one forward fundamental data block and up to one forward supplemental data block. After a delay to allow for processing, the mobile station sends one reverse fundamental data block back to the base station. The base station can then check the forward fundamental data block, forward supplemental data block or reverse fundamental data block for correctness.

The base station can generate data block sizes of 171, 80, 40, 16, or 0 bits (for Multiplex Option 0x01 primary traffic) or 266, 124, 54, 20, or 0 bits (for Multiplex Option 0x02 primary traffic). The base station can generate a data block size of 171 bits (for Multiplex Option 0x03 primary traffic) or 266 bits (for Multiplex Option 0x04 primary traffic). The base station uses a data block size of 0 bits for blank-and-burst transmissions. The base station can generate any of the data block sizes associated with the current multiplex option in each frame without regard to the data block size that was generated in the previous frame. The base station can set the bits within a data block to any desired value; however, to obtain satisfactory measurements of performance, the base station should set these bits randomly and vary the bits from data block to data block.

Service Option Numbers

For systems with P_REV equal to 5 or lower, the service option described by 3GPP2 C.S0013 shall use service option number 2 and is called Service Option 2 when using the Forward Fundamental Code Channel with Multiplex Option 1. It shall use service option number 9 and is called Service Option 9 when using the Forward Fundamental Code Channel with Multiplex Option 0x02. It shall use service option number 30 and is called Service Option 30 when using the Forward Supplemental Code Channel with Multiplex Option 0x03. It shall use service option number 31 and is called Service Option 31 when using the Forward Supplemental Code Channel with Multiplex Option 0x04

For systems with P_REV equal to 6 or higher, the service option described by 3GPP2 C.S0013 shall use service option number 55 and is called Service Option 55. The multiplex option in use can be either 0x01 or 0x02 depending upon the RC configured based on the Table below.

Multiplex Option in use for Service Option 55		
Multiplex Option in use	**Forward Fundamental Channel RC**	**Reverse Fundamental Channel RC**
0x01	1, 3, 4, 6, or 7	1, 3, or 5
0x02	2, 5, 8, or 9	2, 4, or 6

Required Multiplex Option Support

Service Option 2

Service Option 2 shall support an interface with Multiplex Option 0x01. Service Option 2 data blocks shall only be transported as primary traffic on the Forward and Reverse Fundamental Code Channels. Data block transport between Service Option 2 and Multiplex Option 0x01 shall ensure that the leftmost bit of a Service Option 2 data block as defined in Service Option 2 shall correspond to the leftmost bit of the primary fundamental data block.

Service Option 9

Service Option 9 shall support an interface with Multiplex Option 0x02. Service Option 9 data blocks shall only be transported as primary traffic on the Forward and Reverse Fundamental Code Channels. Data block transport between Service Option 9 and Multiplex Option 0x02 shall ensure that the leftmost bit of a Service Option 9 data block as defined in Service Option 9 shall correspond to the leftmost bit of the primary fundamental data block.

Service Option 30

Service Option 30 shall support an interface with Multiplex Option 0x03. Service Option 30 data blocks shall only be transported as primary traffic on the Forward Supplemental Code
Channel and Reverse Fundamental Code Channel. Data block transport between Service Option 30 and Multiplex Option 0x03 shall ensure that the leftmost bit of a Service

Option 30 data block as defined in Service Option 30 shall correspond to the leftmost bit of the primary supplemental data block.

Service Option 31

Service Option 31 shall support an interface with Multiplex Option 0x04. Service Option 31 data blocks shall only be transported as primary traffic on the Forward Supplemental Code Channel and Reverse Fundamental Code Channel. Data block transport between Service Option 31 and Multiplex Option 0x04 shall ensure that the leftmost bit of a Service Option 31 data block as defined in Service Option 31 shall correspond to the leftmost bit of the primary supplemental data block.

Service Option 55

When Service Option 55 is used with Multiplex Option 0x01, the mobile station shall follow the requirement in 2.3.1.1 of 3GPP2 C.S0013 for Service Option 2 as if Service Option 2 were used.

When Service Option 55 is used with Multiplex Option 0x02, the mobile station shall follow the requirement in 2.3.1.1 of 3GPP2 C.S0013 for Service Option 9 as if Service Option 9 were used.

When Service Option 55 is used, any mentioning of Fundamental Code Channel shall be regarded as Fundamental Channel.

Interface to Multiplex Options

Service Option 2 - Transmitted Fundamental Data Blocks

In the mobile station, Service Option 2 shall generate and shall supply exactly one fundamental data block to the multiplex sublayer every 20 ms. The fundamental data block shall be one of five types as shown in the Table below and shall have an internal format as specified in Service Option 2 in 2 2.4.of 3GPP2 C.S0013. The number of bits supplied to the multiplex sublayer for each type of fundamental data block shall be as shown in the Table below. The data contained within the generated fundamental data block shall be based upon the contents of the received fundamental data block and shall be constructed per the requirements of 2.5.1.1in 3GPP2 C.S0013 on Service Option 2.

Fundamental Data Block Types Supplied by Service Option 2 to the Multiplex Sublayer		
Data Block Type	**Bits per Data Block**	**Data Rate (bps)**
Rate 1	171	9600
Rate 1/2	80	4800
Rate 1/4	40	2400
Rate 1/8	16	1200
Blank	0	blank & burst

Service Option 9 - Transmitted Fundamental Data Block

In the mobile station, Service Option 9 shall generate and shall supply exactly one fundamental data block to the multiplex sublayer every 20 ms. The fundamental data

block shall be one of five types as shown in the Table below and shall have an internal format as specified by Service Option 9 in 2.4.2 of 3GPP2 C.S0013. The number of bits supplied to the multiplex sublayer for each type of fundamental data block shall be as shown in the Table below. The data contained within the generated fundamental data block shall be based upon the contents of the received fundamental data block and shall be constructed per the requirements on Service Option 9 in 2.5.1.2 of 3GPP2 C.S0013.

Fundamental Data block Types Supplied by Service Option 9 to the Multiplex Sublayer		
Data Block Type	**Bits per Data Block**	**Data Rate (bps)**
Rate 1	266	14400
Rate 1/2	124	7200
Rate 1/4	54	3600
Rate 1/8	20	1800
Blank	0	blank & burst

Service Option 30 - Transmitted Fundamental Data Blocks

In the mobile station, Service Option 30 shall generate and shall supply exactly one fundamental data block to the multiplex sublayer every 20 ms. The fundamental data block shall be one of four types as shown in the Table below and shall have an internal format as specified in 2.4.3 of 3GPP2 C.S0013. The number of bits supplied to the multiplex sublayer for each type of fundamental data block shall be as shown in the Table below. The data contained within the generated fundamental data block shall be based upon the contents of the received supplemental data block and shall be constructed per the requirements of 2.5.1.3 of 3GPP2 C.S0013.

Fundamental Data Block Types Supplied by Service Option 30 to the Multiplex Sublayer		
Data Block Type	**Bits per Data Block**	**Data Rate (bps)**
Rate 1	171	9600
Rate 1/2	80	dim & burst
Rate 1/8	16	1200
Blank	0	blank & burst

Service Option 31 - Transmitted Fundamental Data Blocks

In the mobile station, Service Option 31 shall generate and shall supply exactly one fundamental data block to the multiplex sublayer every 20 ms. The fundamental data block shall be one of four types as shown in the Table below and shall have an internal format as specified in 2.4.4 of 3GPP2 C.S0013. The number of bits supplied to the multiplex sublayer for each type of fundamental data block shall be as shown in the Table below. The data contained within the generated fundamental data block shall be based upon the contents of the received supplemental data block and shall be constructed per the requirements of 2.5.1.4 of 3GPP2 C.S0013.

Fundamental Data Block Types Supplied by Service Option 31 to the Multiplex Sublayer		
Data Block Type	**Bits per Data Block**	**Data Rate (bps)**
Rate 1	266	14400
Rate 1/2	124	dim & burst
Rate 1/8	20	1800
Blank	0	blank & burst

Service Option 55 - Transmitted Fundamental Data Blocks

If Multiplex Option 0x01 is used, the mobile station shall follow the descriptions of 2.3.2.1.1 of 3GPP2 C.S0013 for Service Option 2 as if Service Option 2 were used.

If Multiplex Option 0x02 is used, the mobile station shall follow the descriptions of 2.3.2.2.1 of 3GPP2 C.S0013 for Service Option 9 as if Service Option 9 were used.

Valid Service Configuration Attributes for Service Option 55	
Service Configuration Attribute	**Valid Selections**
Forward Multiplex Option	Multiplex Option 0x01 or 0x02
Reverse Multiplex Option	Same as Forward Multiplex Option
Forward Fundamental Channel RC	1, 3, 4, 6, or 7 with Multiplex Option 0x01 2, 5, 8, or 9 with Multiplex Option 0x02
Reverse Fundamental Channel RC	1, 3, or 5 with Multiplex Option 0x01 2, 4, or 6 with Multiplex Option 0x02
Forward Traffic Type	Primary Traffic on Forward Fundamental Channel
Reverse Traffic Type	Primary Traffic on Reverse Fundamental Channel

Test Data Service Option (TDSO SO32)

General Description

TDSO provides for the generation of an arbitrary (pre-selected or random) data source for transport over forward and reverse traffic channels while following an arbitrary (pre-selected or random) transmission frame activity. The test is performed at a fixed data rate. The mobile station and the base station generate TDSO data frames for the configured and allocated traffic channels. The content of each frame is generated per a selectable byte pattern or by employing a hybrid approach consisting of pseudo-randomly generated data together with a circular buffer.

The frame generation processes are synchronized between the mobile station and the base station. This permits the receiving station to reproduce the transmitted frames and compare them to the received frames. The TDSO counts the number of various frame types that were transmitted on a particular traffic channel. The TDSO also counts the number of various frame types received on the traffic channel according to the information provided by the multiplex sublayer and the result of the comparison between the frame received and the locally generated replica. Frame error and bit error statistics can be calculated from these counts.

Service Option Number

The TDSO described by 3GPP2 C.S0026 shall use service option number 32 (0x20). The TDSO allows system signaling to take precedence.

Required Multiplex Option Support

The TDSO shall transmit and receive traffic channel frames in accordance with the requirements of the multiplex option or multiplex options configured for the service option.

Multiplex Option Support for FCH/DCCH (for 20 ms FCH/DCCH Frames Only)

On the FCH/DCCH physical channels, the TDSO shall support an interface with the multiplex options indicated in the Table below.

Multiplex Option Support for FCH or DCCH		
	Multiplex Option	
	Forward RC = 1, 3, 4, 6, or 7	Forward RC = 2, 5, 8, or 9
	Reverse RC = 1, 3, or 5	Reverse RC = 2, 4, or 6
FCH/DCCH	0x1	0x2

When Multiplex Option 0x01 is used, MuxPDU Type 1 is used (See 2.5 of 3GPP2 C.S0026 for interface to multiplex option).

When Multiplex Option 0x02 is used, MuxPDU Type 2 is used (See 2.5 of 3GPP2 C.S0026 for interface to multiplex option)

Multiplex Option Support for SCH

On the SCH(s) physical channel(s), the TDSO shall support an interface with the multiplex options as indicated in the Table below.

The SCH rate is expressed in multiples of a base rate. For example, odd multiplex options have the base rate 9600 bps, a 2x SCH rate means twice of 9600 bps or 19200 bps. For Supplemental Channel rates lower than or equal to 16x, MuxPDU Type 1, 2 or 3 that is associated with the multiplex option as shown in the Table below will be used.

For Supplemental Channel rates higher than 16x, the multiplex sublayer is configured to use 0xf20, which uses MuxPDU Type 5 (See 3GPP2 C.S0003 for interface to multiplex options). TDSO shall request that the length indicator of the MuxPDU Type 5 header be set to '00'. If LTUs are used, each LTU shall contain only one non-null MuxPDU Type 5.[43]

[43] MuxPDU: Multiplex Sublayer Protocol Data Unit

Multiplex Options Applicable to an SCH									
SCH Rate	Maximum number of MuxPDUs in the physical layer SDU			Multiplex option					
				Forward RC = 3, 4, 6, or 7 Reverse RC = 3 or 5			Forward RC = 5, 8, or 9 Reverse RC = 4 or 6		
	MuxPDU Type 1 or 2	MuxPDU Type 3		MuxPDU Type 1	MuxPDU Type 3		MuxPDU Type 2	MuxPDU Type 3	
		Single	Double		Single	Double		Single	Double
1x	1			0x03			0x04		
2x		2	1		0x809	0x905		0x80a	0x906
4x		4	2		0x811	0x909		0x812	0x90a
8x		8	4		0x821	0x911		0x822	0x912
16x			8			0x921			0x922

Test Modes

The Forward Traffic Channel is verified by invoking Fundamental Channel test modes, Dedicated Control Channel test modes, Supplemental Code Channel test modes, and Supplemental Channel test modes. The Reverse Traffic Channel is verified by invoking Fundamental Channel test modes, Dedicated Control Channel test modes, and Supplemental Channel test modes. The table below lists the nine test modes and the mapping to radio configurations.

Test Mode	Forward Traffic Channel Radio Configuration	Reverse Traffic Channel Radio Configuration	Service Option
1	1	1	FCH: 2 or 55, or 54 SCCH: 30
2	2	2	FCH: 9 or 55, or 54 SCCH: 31
3	3	3	FCH: 55, 54 or 32 DCCH: 32 SCH: 32
4	4	3	
5	5	4	
6	6	5	
7	7	5	
8	8	6	
9	9	6	

Fundamental Channel Test Mode 1 is entered by setting up a call using the Loopback Service Option (Service Option 2 or 55) or the Markov Service Option (Service Option 54).

Fundamental Channel Test Mode 2 is entered by setting up a call using the Loopback Service Option (Service Option 9 or 55) or the Markov Service Option (Service Option 54).

Fundamental Channel Test Modes 3 through 9 are entered by setting up a call using the Loopback Service Option (Service Option 55), Markov Service Option (Service Option 54), or Test Data Service Option (Service Option 32).

Dedicated Control Channel Test Modes 3 through 9 and Supplemental Channel Test Modes 3 through 9 are entered by setting up a call using the Test Data Service Option (Service Option 32).

Supplemental Code Channel Test Mode 1 is entered by setting up a call using the Loopback Service Option (Service Option 30).

Supplemental Code Channel Test Mode 2 is entered by setting up a call using the Loopback Service Option (Service Option 31). The mobile station shall support the Loopback Service Option if the mobile station supports a Forward Fundamental Channel, Reverse Fundamental Channel or Forward Supplemental Code Channel.

The mobile station shall support the Test Data Service Option if it supports a Forward Dedicated Control Channel, Reverse Dedicated Control Channel, Forward Supplemental Channel, or Reverse Supplemental Channel. The mobile station may support the Markov Service Option if the mobile station supports a Forward Fundamental Channel or a Reverse Fundamental Channel.

Open Loop Output Power for Reverse Link Channels

The estimated open loop output power for the various Reverse Link Channels is summarized in the following Table (3GPP2 C.S0057 Table 2.3.1-1: Open-Loop Power Offsets). The mean power is referenced to the nominal CDMA Channel bandwidth of 1.23 MHz for Spreading Rate 1 or 3.69 MHz for Spreading Rate 3. For simplicity the Offset Power constants are expressed without units. For example, –73 is equal to 10 × log10 ($10^{-7.3}$ mW^2).

Open Loop Power Offsets				
Band Class	**Forward Spreading Rate**	**Reverse Spreading Rate**	**Reverse Channels**	**Offset Power**
0, 2, 3, 5, 7, 9, 10, 11, and 12	1	1	Access Channel Reverse Traffic Channel (RC = 1 or 2)	–73
			Enhanced Access Channel Reverse Common Control Channel Reverse Traffic Channel (RC = 3 or 4) Reverse Packet Data Channel (RC = 7)	–81.5
	3	1	Reverse Traffic Channel (RC = 3 or 4)	–76.5
		3	Enhanced Access Channel Reverse Common Control Channel Reverse Traffic Channel (RC = 5 or 6)	–76.5

1, 4, 6, and 8	1	1	Access Channel Reverse Traffic Channel (RC = 1 or 2)	–76
			Enhanced Access Channel Reverse Common Control Channel Reverse Traffic Channel (RC = 3 or 4) Reverse Packet Data Channel (RC = 7)	–84.5
	3	1	Reverse Traffic Channel (RC = 3 or 4)	–79.5
		3	Enhanced Access Channel Reverse Common Control Channel Reverse Traffic Channel (RC = 5 or 6)	–79.5

Maximum RF Output Power

Method of Measurement (3GPP2 C.S0011: 4.4.5.2):

Figures & Tables
(C.S0011)

1. Connect the base station to the mobile station antenna connector as shown in Figure 6.5.1-4 (C.S0011). The AWGN generator and the interference generator are not applicable in this test.
2. For each band class that the mobile station supports, configure the mobile station to operate in that band class and perform steps 3 through 35.
3. If the mobile station supports Reverse Traffic Channel Radio Configuration 1 and Forward Traffic Channel Radio Configuration 1, set up a call using Fundamental Channel Test Mode 1 with 9600 bps data rate only and perform steps 6 through 8.
4. If the mobile station supports the Radio Configuration 3 Reverse Fundamental Channel and demodulation of Radio Configuration 3, 4, or 5, set up a call using Fundamental Channel Test Mode 3 with 9600 bps data rate only and perform steps 6 through 8.
5. If the mobile station supports the Radio Configuration 3 Reverse Dedicated Control Channel and demodulation of Radio Configuration 3, 4, or 5, set up a call using Dedicated Control Channel Test Mode 3 with 9600 bps data rate and 100% frame activity and perform steps 6 through 8.
6. Set the test parameters as specified in Table 4.4.5.2-1 (C.S0011).
7. Send continuously ‘0’ power control bits to the mobile station. (All bits UP)
8. Measure the mobile station output power at the mobile station antenna connector.
9. If the mobile station supports the Radio Configuration 3 Reverse Fundamental Channel, Radio Configuration 3 Reverse Dedicated Control Channel and demodulation of Radio Configuration 3, 4, or 5, set up a call using Fundamental Channel Test Mode 3 with 1500 bps Fundamental Channel data rate only and 9600 bps Dedicated Control Channel with 100 % frame activity, and perform steps 12 through 19.

10. If the mobile station supports the Radio Configuration 3 Reverse Fundamental Channel, Radio Configuration 3 Reverse Supplemental Channel 0 and demodulation of Radio Configuration 3, 4, or 5, set up a call using Supplemental Channel Test Mode 3 with 9600 bps Fundamental Channel and 9600 bps Supplemental Channel 0 data rate, and perform steps 12 through 19.
11. If the mobile station supports the Radio Configuration 3 Reverse Dedicated Control Channel, Radio Configuration 3 Reverse Supplemental Channel 0 and demodulation of Radio Configuration 3, 4, or 5, set up a call using Supplemental Channel Test Mode 3 with 9600 bps Dedicated Control Channel with 100% frame activity and 9600 bps Supplemental Channel 0 data rate, and perform steps 12 through 19.
12. Set the test parameters as specified in Table 4.4.5.2-2 (C.S0011).
13. Send alternating '0' and '1' power control bits to the mobile station using the smallest supported closed loop power control step size supported by the mobile station. (Note: all bits UP can disable SCH; SCH turn off threshold may differ from SCH turn on threshold by several dB depending on data rate)
14. Determine the active channel configuration. If the desired channel configuration is not active, increase $\hat{I}_{or}$ by 1 dB and repeat the verification. Repeat this step until the desired channel configuration becomes active.
15. Measure the mobile station output power at the mobile station antenna connector.
16. Decrease $\hat{I}_{or}$ by 0.5 dB.
17. Determine the active channel configuration. If the active channel configuration is the desired channel configuration, measure the mobile station output power at the mobile station antenna connector.
18. Repeat steps 16 and 17 until the output power no longer increases or the desired channel configuration is no longer active. Record the highest output power achieved with the desired channel configuration active.
19. Repeat steps 12 through 18 ten times and average the results.
20. If the mobile station supports the Radio Configuration 5 Reverse Fundamental Channel and demodulation of Radio Configuration 6, 7, 8, or 9, set up a call using Fundamental Channel Test Mode 7 with 9600 bps data rate only and perform steps 22 through 24.
21. If the mobile station supports the Radio Configuration 5 Reverse Dedicated Control Channel and demodulation of Radio Configuration 6, 7, 8, or 9, set up a call using Dedicated Control Channel Test Mode 7 with 9600 bps data rate and 100% frame activity and perform steps 22 through 24.
22. Set the test parameters as specified in Table 4.4.5.2-3 (C.S0011).
23. Send continuously '0' power control bits to the mobile station. (All bits UP)
24. Measure the mobile station output power at the mobile station antenna connector.
25. If the mobile station supports the Radio Configuration 5 Reverse Fundamental Channel, Radio Configuration 5 Reverse Dedicated Control Channel and demodulation of Radio Configuration 6, 7, 8, or 9, set up a call using Fundamental Channel Test Mode 7 with 1500 bps Fundamental Channel data rate only and 9600

26. If the mobile station supports the Radio Configuration 5 Reverse Fundamental Channel, Radio Configuration 5 Reverse Supplemental Channel 0 and demodulation of Radio Configuration 6, 7, 8, or 9, set up a call using Supplemental Channel Test Mode 7 with 9600 bps Fundamental Channel and 9600 bps Supplemental Channel 0 data rate, and perform steps 28 through 35.
27. If the mobile station supports the Radio Configuration 5 Reverse Dedicated Control Channel, Radio Configuration 5 Reverse Supplemental Channel 0 and demodulation of Radio Configuration 6, 7, 8, or 9, set up a call using Supplemental Channel Test Mode 7 with 9600 bps Dedicated Control Channel with 100% frame activity and 9600 bps Supplemental Channel 0 data rate, and perform steps 28 through 35.
28. Set the test parameters as specified in Table 4.4.5.2-4 (C.S0011).
29. Send alternating '0' and '1' power control bits to the mobile station using the smallest supported closed loop power control step size supported by the mobile station. (Note: all bits UP can disable SCH; SCH turn off threshold may differ from SCH turn on threshold by several dB depending on data rate)
30. Determine the active channel configuration. If the desired channel configuration is not active, increase $\hat{I}_{or}$ by 1 dB. Repeat this step until the desired channel configuration becomes active.
31. Measure the mobile station output power at the mobile station antenna connector.
32. Decrease $\hat{I}_{or}$ by 0.5 dB.
33. Determine the active channel configuration. If the active channel configuration is the desired channel configuration, measure the mobile station output power at the mobile station antenna connector.
34. Repeat steps 32 and 33 until the output power no longer increases or the desired channel configuration is no longer active. Record the highest output power achieved with the desired channel configuration active.
35. Repeat steps 28 through 34 ten times and average the results.

For each radio configuration that the mobile station supports, the maximum output power of each mobile station class shall be such that the maximum radiated power for the mobile station class using the antenna gain recommended by the mobile station manufacturer is within the limits specified in Table 4.4.5.3-1 (maximum radiated output for mobile station classes). The antenna gain is determined using the Radiated Signal Measurement Procedures (See 2.6 of C.S0011) and calculating the antenna gain for EIRP or ERP as appropriate. When the mobile station is transmitting using one of the test mode channel configurations specified in Table 4.4.5.3-2 (maximum output with backoff allowance), the maximum output power requirements of the mobile station specified in Table 4.4.5.3-1 may be reduced by the applicable output power backoff allowance specified in Table 4.4.5.3-2. (See above attachment or C.S0011 for Tables)

Code Channel Output Power for the Reverse Traffic Channel (C.S0011)

1. Connect the base station to the mobile station antenna connector as shown in Figure 6.5.1-4 of C.S0011. The AWGN generator and the interference generator are not applicable in this test.
2. For each band class that the mobile station supports, configure the base station and mobile station to operate in that band class and perform steps 3 through 12.
3. Set the Reverse Link Attribute Adjustment Gain Table and Reverse Channel Adjustment Gain Table maintained by the mobile station to 0.
4. If the mobile station supports operation on the Reverse Fundamental Channel, set up a call using Fundamental Channel Test Mode 3 (or 7) (See 1.3 of C.S0011) with 9600 bps data rate only, 20 ms frame length Radio Configuration 3 (or 7) Reverse Fundamental Channel and perform steps 13 through 15.
5. If the mobile station supports operation on the Reverse Fundamental Channel, set up a call using Fundamental Channel Test Mode 3 (or 7) (See 1.3 of C.S0011) with 4800 bps data rate only, 20 ms frame length Radio Configuration 3 (or 7) Reverse Fundamental Channel and perform steps 13 through 15.
6. If the mobile station supports operation on the Reverse Fundamental Channel, set up a call using Fundamental Channel Test Mode 3 (or 7) (See 1.3 of C.S0011) with 2700 bps data rate only, 20 ms frame length Radio Configuration 3 (or 7) Reverse Fundamental Channel and perform steps 13 through 15.
7. If the mobile station supports operation on the Reverse Fundamental Channel, set up a call using Fundamental Channel Test Mode 3 (or 7) (See 1.3 of C.S0011) with 1500 bps data rate only, 20 ms frame length Radio Configuration 3 (or 7) Reverse Fundamental Channel and perform steps 13 through 15.
8. If the mobile station supports operation on the Reverse Dedicated Control Channel, set up a call using Dedicated Control Channel Test Mode 3 (or 7) (See 1.3 of C.S0011) with 9600 bps data rate, 20 ms frame length Radio Configuration 3 (or 7) Reverse Dedicated Control Channel and perform steps 13 through 15.
9. If the mobile station supports convolutional coding on the Reverse Supplemental Channel, set up a call using Supplemental Channel Test Mode 3 (or 7) (See 1.3 of C.S0011) with 9600 bps data rate only, 20 ms frame length with convolutional coding of the Radio Configuration 3 (or 7) Reverse Supplemental Channel and perform steps 13 through 15.
10. If the mobile station supports convolutional coding on the Reverse Supplemental Channel, set up a call using Supplemental Channel Test Mode 3 (or 7) (See 1.3 of C.S0011) with both the highest data rate supported by the mobile station using a 20 ms frame length with convolutional coding of the Radio Configuration 3 (or 7) Reverse Supplemental Channel, and either a Radio Configuration 3 (or 7) 9600 bps, 20 ms frame length Reverse Fundamental Channel or 9600 bps, 20 ms frame length Reverse Dedicated Control Channel with 100% duty cycle and perform steps 13 through 15.
11. If the mobile station supports turbo coding on the Reverse Supplemental Channel, set up a call using Supplemental Channel Test Mode 3 (or 7) (See 1.3 of C.S0011)

with 19200 bps data rate only, 20 ms frame length with turbo coding of the Radio Configuration 3 (or 7) Reverse Supplemental Channel and perform steps 13 through 15.

12. If the mobile station supports operation on the Reverse Supplemental Channel using turbo coding, set up a call using Supplemental Channel Test Mode 3 (or 7) (See 1.3 of C.S0011) with both the highest data rate supported by the mobile station using a 20 ms frame length with turbo coding of the Radio Configuration 3 (or 7) Reverse Supplemental Channel, and either a Radio Configuration 3 (or 7) 9600 bps, 20 ms frame length Reverse Fundamental Channel or 9600 bps, 20 ms frame length Reverse Dedicated Control Channel with 100% duty cycle and perform steps 13 through 15.
13. Set the test parameters as specified below:

Parameter	Units	Value
$\hat{I}_{or}$	dBm/1.23 MHz	-65
Pilot E_c / I_{or}	dB	-7
Traffic E_c / I_{or}	dB	-7.4

14. Send alternating ‘0’ and ‘1’ power control bits on the Forward Traffic Channel. (Note: all bits UP may disable SCH)
15. Monitor the mobile station transmitter output at the antenna connector with a Code Domain Power Analyzer described in 6.4.2.2 and measure the relative mean output power of each active code channel to the Reverse Pilot Channel.

The mean output power difference between the Enhanced Access Channel Header and Reverse Pilot Channel shall be 6.75 ± 0.25 dB. The mean output power difference between either the Enhanced Access Channel Data or Reverse Common Control Channel and the Reverse Pilot Channel shall be 3.75 ± 0.25 dB. For tests not involving the Reverse Supplemental Channel, the mean output power difference between each Reverse Traffic Channel code channel and the Reverse Pilot Channel shall be the code channel accuracy specified in Table 4.4.9.3-1. For tests involving the Reverse Supplemental Channel, the mean output power difference between the Reverse Supplemental Channel code channel and the Reverse Pilot Channel shall be the code accuracy specified in Table 4.4.9.3-2 and 4.4.9.3-3 for the convolutional coded and turbo coded cases, respectively. For the Reverse Fundamental Channel (or Reverse Dedicated Control Channel, whichever is the configuration) being transmitted in addition to the Supplemental Channel, the mean output power difference between the Reverse Fundamental Channel (or Reverse Dedicated Control Channel) code channel and the Reverse Pilot Channel shall be the code accuracy specified in Table 4.4.9.3-4 and 4.4.9.3-5 for the convolutional coded and turbo coded cases, respectively. (See attachment below: CDP Offsets for various Tables)

CDP Offsets

APPENDIX B: 1x Ev-Do Transmitter Configurations Info

1x Ev-Do is the High Rate Packet Data specification for CDMA 2000. Ev-Do transmitters can operate either independently in laptop computers and similar host products or in conjunction with CDMA 2000 in devices such as wireless handsets. Devices with both Ev-Do and 1x-RTT may roam between networks to optimize data connectivity. Consequently, Ev-Do connections may be handoff to the 1x RTT networks to maintain simultaneous voice & data transmissions under CDMA 2000. Since Ev-Do and 1x-RTT do not operate simultaneously, these operating modes are tested independently for RF exposure compliance.

Terms and Definitions

Reverse Access Channel. The portion of the Reverse Channel that is used by access terminals to communicate with the access network when they do not have a traffic channel assigned. There is a separate Reverse Access Channel for each sector of the access network.

Reverse Access Data Channel. The portion of the Access Channel that carries data.

Reverse Access Pilot Channel. The portion of the Access Channel that carries the pilot.

Reverse Channel. The portion of the Channel consisting of those Physical Layer Channels transmitted from the access terminal to the access network.

Reverse Traffic Ack Channel. The portion of the Reverse Traffic Channel that indicates the success or failure of the Forward Traffic Channel reception.

Reverse Traffic Channel. The portion of the Reverse Channel that carries information from a specific access terminal to the access network. The Reverse Traffic Channel can be used as either a Dedicated Resource or a non-Dedicated Resource. Prior to successful access terminal authentication, the Reverse Traffic Channel serves as a non-Dedicated Resource. Only after successful access terminal authentication can the Reverse Traffic Channel be used as a Dedicated Resource for the specific access terminal.

Reverse Traffic Data Channel. The portion of the Reverse Traffic Channel that carries user data.

Reverse Traffic MAC Channel. The portion of the Reverse Traffic Channel dedicated to Medium Access Control activities. The Reverse Traffic MAC Channel consists of the RRI and DRC Channels (Rev. 0).

Reverse Traffic MAC Data Rate Control (DRC) Channel. The portion of the Reverse Traffic Channel that indicates the rate at which the access terminal can receive the Forward Traffic Channel and the sector from which the access terminal wishes to receive the Forward Traffic Channel.

Reverse Traffic MAC Reverse Rate Indicator (RRI) Channel. The portion of the Reverse Traffic Channel that indicates the rate of the Reverse Traffic Data Channel.

Reverse Traffic Pilot Channel. The portion of the Reverse Traffic Channel that carries the pilot.

Data Source Control (DSC) Channel. The Data Source Control Channel is used by the access terminal to indicate to the access network the selected serving cell on the Forward Channel. This channel is not applicable to Subtype 0 or 1 Physical Layer (Rev. A).

Auxiliary Pilot Channel. The Auxiliary Pilot Channel is used by the access terminal to aid reverse link channel estimation by the access network. This channel is not applicable to Subtype 0 or 1 Physical Layer (Rev. A).

1x Ev-Do Rev. 0 Reverse Link Channel Structures

The reverse channel structure supports the Access and Traffic channels as shown in attachment 1 below. The transmissions are in 16-slot frames (26.667 ms) at 2048 chips per slot. The Access channel includes the Pilot and Data channels. The Traffic channel contains the Pilot, MAC, ACK and Data channels. The Reverse Rate Indicator (RRI) and the Data Rate Control (DRC) channels are included in the MAC channel. The Pilot channel is punctured by the RRI channel in the Traffic channel and both channels transmit at the same power level. The ACK channel is active only for the first half of each slot. The Data channel supports five BPSK modulated data rates within the Traffic channel; 9.6, 19.2, 38.4, 76.8 and 153.6 kbps. Further details are available in various versions of the 3GPP2 C.S0024 standards and TIA-856. 3GPP2 documents may be available for download at: http://www.3gpp2.org/Public_html/specs/alltsgscfm.cfm. A tutorial is also available at: http://cp.literature.agilent.com/litweb/pdf/5988-7694EN.pdf.

C.S0024_v2.0-2
(attachment 1)

Additional Info on
EV-DO

1x Ev-Do Rev. 0 Channel Spreading, Combining and Code Scrambling

Different length Walsh Covers are applied to the Pilot, DRC, ACK and Data channels for identification within the Traffic channel and to maintain a constant chip rate of 1.2288 Mcps. These four channels are summed together and scrambled with HPSK (Hybrid Phase Shift Keying) modulation in the reverse traffic channel. The Pilot and ACK channels are quadrature spread, complex multiplied with scrambling codes, and summed to form the I-Channel sequence. The DRC and Data channels are quadrature spread and summed to form the Q-Channel sequence.

Code domain power is measured relative to the Pilot/RRI channel power level. Power for the Data, ACK, DRC channels are adjusted with respect to the Pilot channel by the corresponding *Channel Relative Gain* values shown in attachment 1 (Figure 9.2.1.3.1-3). The relative power of the Data channel can vary from 3.75 to 18.5 dB according to data rates (Figure 9.2.1.2.4.1-1). 3GPP2 C.S0024 requires the power for these channels to be within ± 0.25 dB of those defined by the MAC layer, including *DRCChannelGain*, *ACKChannelgain* and *DataChannelGain*.

Device Test Configurations

The RF exposure procedures for Ev-Do device must address both the operating configurations and exposure conditions of a transmitter. The maximum output power should be determined according to the code channel requirements defined in applicable 3GPP2 standards and verified through code domain power measurements to ensure the correct maximum average output power is applied during the SAR measurement. Until additional information is available, the procedures on maximum RF output power in C.S0033-0 and C.S0033-A should be adapted to establish stable maximum average output conditions for measuring the SAR of Ev-Do transmitters. Device should be tested in the applicable head and body exposure test positions according to procedures defined in Supplement C.

The procedures test laboratories use to establish transmitter operating configurations and SAR measurement conditions may vary due to test equipment availability. A communication test set is used to perform the call processing and configure the required operating parameters to test the device. The average output power and code domain channel power levels should be monitored and controlled (All Bits Up) during the SAR measurement through the communication test set. The relevant operating and configuration parameters should be documented to enable the tests to be repeated with minimal difficulties.

The procedures on maximum RF output power in 3GPP2 C.S0033-0 and C.S0033-A should be adapted to configure Rev. 0 and Rev. A devices respectively to transmit in predictable and stable test conditions for SAR measurements. These procedures use the Test Application Protocol (TAP) defined in C.S0029 to configure uplink and downlink test requirements. FTAP and RTAP are used to test Rev. 0 devices and FETAP and RETAP are used to test Rev. A devices. The protocol requires an RTAP/RETAP to configure the Subtype 0/1 Physical Layer using a Reverse Data Channel rate of 153.6 kbps and an RETAP to configure the Subtype 2 Physical Layer with a Reverse Data Channel payload size of 4096 bits and a Termination Target of 16 slots (153.6 kbps equivalent). A Forward Traffic Channel data rate corresponding to the 2-slot version of 307.2 kbps with the ACK Channel transmitting in all slots is configured for Subtype 0/1 and 2 Physical layers using FTAP and FETAP respectively. The received power spectral density on the Forward Channel, $\hat{I}_{or}$, measured at the antenna connector of the transmitter should be set according to the maximum output power procedures in C.S0033-0 and C.S0033-A. Continuous '0' power control bits (All Bits Up) are sent to the Ev-Do transmitter to maintain its maximum output power.

Default (Subtype 0) and Subtype 1 physical Layer Protocol

The transmission unit of the physical layer is a physical layer packet of length 256, 512, 1024, 2048, 3072, or 4096 bits that carries one or more MAC layer packets with a format depending upon the channel on which it is transmitted.

Reverse Channel Structure

The Reverse Channel consists of the Access Channel and the Reverse Traffic Channel. The Access Channel shall consist of a Pilot Channel and a Data Channel. The Reverse Traffic Channel shall consist of a Pilot Channel, a Reverse Rate Indicator (RRI) Channel, a Data Rate Control (DRC) Channel, an Acknowledgment (ACK) Channel, and a Data Channel. The RRI Channel is used to indicate the data rate of the Data Channel being transmitted on the Reverse Traffic Channel. The DRC Channel is used by the access terminal to indicate to the access network the requested Forward Traffic Channel data rate and the selected serving sector on the Forward Channel. The ACK Channel is used by the access terminal to inform the access network whether or not the physical layer packet transmitted on the Forward Traffic Channel has been received successfully.

For the Reverse Traffic Channel, the encoded RRI Channel symbols shall be time-division multiplexed with the Pilot Channel. This time-division-multiplexed channel is still referred to as the Pilot Channel. For the Access Channel, the RRI symbols shall not be transmitted and the Pilot Channel shall not be time-division multiplexed. The Pilot Channel, the DRC Channel, the ACK Channel, and the Data Channel shall be orthogonally spread by Walsh functions of length 4, 8, or 16. Each Reverse Traffic Channel shall be identified by a distinct user long code. The Access Channel for each sector shall be identified by a distinct Access Channel long code. The Reverse Traffic Channel frame shall be 26.66… ms in duration. The zero offset frame boundary shall be aligned to the rollover of the short PN codes. Each Reverse Traffic Channel frame shall consist of 16 slots, with each slot 1.66… ms in duration. Each slot contains 2048 PN chips.

When the access terminal is transmitting a Reverse Traffic Channel, it shall continuously transmit the Pilot Channel and the RRI Channel. The encoded RRI symbols shall be time-division multiplexed with the Pilot Channel and shall be transmitted on Walsh channel W_0^{16}. The encoded RRI symbols shall be allocated the first 256 chips of every slot. When the DRC Channel is active, it shall be transmitted for full slot durations on Walsh channel W_8^{16}. The access terminal shall transmit an ACK Channel bit in response to every Forward Traffic Channel slot that is associated with a detected preamble directed to the access terminal. Otherwise, the ACK Channel shall be gated off. When the ACK Channel bit is transmitted, it shall be transmitted on the first half slot on Walsh channel W_4^8.

Subtype 0/1

Data Rate and Modulation

The access terminal shall transmit information on the Access Channel at a fixed data rate of 9.6 kbps if using the Default (Subtype 0) Physical Layer Protocol. The access terminal shall transmit information on the Access Channel at a variable data rate of 9.6, 19.2, or

38.4 kbps, according to the Access Channel MAC Protocol if using the Subtype 1 Physical Layer Protocol. The access terminal shall transmit information on the Reverse Traffic Channel at a variable data rate of 9.6, 19.2, 38.4, 76.8, or 153.6 kbps, according to the Reverse Traffic Channel MAC Protocol.

Modulation Parameters for the Access Channel and the Reverse Traffic Channel

	Data Rate (kbps)				
Parameter	**9.6**	**19.2**	**38.4**	**76.8**	**153.6**
Reverse Rate Index	1	2	3	4	5
Bits per Physical Layer Packet	256	512	1,024	2,048	4,096
Physical Layer Packet Duration (ms)	26.66…	26.66…	26.66…	26.66…	26.66…
Code Rate	1/4	1/4	1/4	1/4	1/2
Code Symbols per Physical Layer Packet	1,024	2,048	4,096	8,192	8,192
Code Symbol Rate (ksps)	38.4	76.8	153.6	307.2	307.2
Interleaved Packet Repeats	8	4	2	1	1
Modulation Symbol Rate (ksps)	307.2	307.2	307.2	307.2	307.2
Modulation Type	BPSK	BPSK	BPSK	BPSK	BPSK
PN Chips per Physical Layer Packet Bit	128	64	32	16	8

Reverse Traffic Channel Output Power

When the access terminal is transmitting the Reverse Traffic Channel, the access terminal shall control the mean output power using a combination of closed-loop and open-loop power control (see C.S0024-A V1.0 12.2.1.2.4 and 12.2.1.4). Throughout 12.2.1.2, the channel formed by multiplexing the RRI Channel onto the Pilot Channel is referred to as the Pilot Channel.

When the access terminal is transmitting the Reverse Traffic Channel, the access terminal transmits the Pilot Channel, the DRC Channel, the ACK Channel when acknowledging received physical layer packets, and the Data Channel when transmitting physical layer packets. These channels shall be transmitted at power levels according to open-loop and closed-loop power control. The transmitted power level of the Data Channel shall be adjusted depending on the selected data rate (see 12.2.1.2.4) and reverse link power control. The traffic data shall be transmitted in the form of physical layer packets (duration 26.66… ms), which may occur either contiguously or sporadically. When the data rate is changed, the access terminal output power, relative to the desired value in steady state, shall be within ±0.5 dB or 20% of the change in dB, whichever is greater. The access terminal output power shall settle to within ±0.5 dB of the steady-state value within 200 µs of the physical layer packet boundary.

The power of the Data Channel relative to that of the Pilot Channel shall be as specified in the Table below in which *DataOffsetNom*, *DataOffset9k6*, *DataOffset19k2*,

DataOffset38k4, *DataOffset76k8*, and *DataOffset153k6* are public data of the Reverse Traffic Channel MAC Protocol.

Relative Power Levels vs. Data Rate

Data Rate (kbps)	Data Channel Gain Relative to Pilot (dB)
0	–∞ (Data Channel Is Not Transmitted)
9.6	*DataOffsetNom + DataOffset9k6 + 3.75*
19.2	*DataOffsetNom + DataOffset19k2 + 6.75*
38.4	*DataOffsetNom + DataOffset38k4 + 9.75*
76.8	*DataOffsetNom + DataOffset76k8 + 13.25*
153.6	*DataOffsetNom + DataOffset153k6 + 18.5*

During the transmission of the DRC Channel, the power of the DRC Channel relative to that of the Pilot Channel shall be as specified by *DRCChannelGain*, where *DRCChannelGain* is public data of the Forward Traffic Channel MAC Protocol. During the transmission of the ACK Channel, the power of the ACK Channel relative to that of the Pilot Channel shall be as specified by *ACKChannelGain*, where *ACKChannelGain* is public data of the Forward Traffic Channel MAC Protocol. The access terminal shall maintain the power of the Data Channel, DRC Channel, and ACK Channel, relative to that of the Pilot Channel, to within ±0.25 dB of the specified values.

Walsh Channel Assignments for Physical Layer Reverse Traffic Channel

Channel	Walsh Channel
Pilot / Reverse Rate Indicator (RRI)	W_0^{16}
Data Rate Control (DRC)	W_8^{16}
ACK	W_4^{8}
Data	W_2^{4}

If the access terminal is unable to transmit at the requested output power level when the maximum Reverse Traffic Channel data rate is 9600 bps, the access terminal shall reduce the power of the DRC Channel and the ACK Channel accordingly. The maximum power reduction for the DRC Channel corresponds to gating off the DRC Channel. The maximum power reduction for the ACK Channel corresponds to gating off the ACK Channel. If the ACK Channel is active, the ACK Channel power reduction shall occur only after the DRC Channel has been gated off. The access terminal shall perform the power reduction within one slot of determining that the access terminal is unable to transmit at the requested output power level.

Subtype 2 Physical Layer Protocol (Rev. A)

The specification for the Subtype 2 Physical Layer Protocol supports the Enhanced (Subtype 1) Access Channel MAC Protocol, the Enhanced (Subtype 1) Control Channel MAC Protocol, the Enhanced (Subtype 1) Forward Traffic Channel MAC Protocol and the Subtype 3 Reverse Traffic Channel MAC Protocol. The transmission unit of this physical layer protocol is a Subtype 2 Physical Layer packet, each containing a MAC Layer packet with a format depending upon the channel on which it is transmitted. The length of a Forward Traffic Channel physical layer packet shall be 128, 256, 512, 1024, 2048, 3072, 4096, or 5120 bits. The length of a Reverse Traffic Channel physical layer

packet shall be 128, 256, 512, 768, 1024, 1536, 2048, 3072, 4096, 6144, 8192, or 12288 bits.

Reverse Channel Structure

The Reverse Channel consists of the Access Channel and the Reverse Traffic Channel. The Access Channel shall consist of a Pilot Channel and a Data Channel. The Reverse Traffic Channel shall consist of a Pilot Channel, a Reverse Rate Indicator (RRI) Channel, a Data Source Control (DSC) Channel, a Data Rate Control (DRC) Channel, an Acknowledgment (ACK) Channel, and a Data Channel. The Reverse Traffic Channel may also include an Auxiliary Pilot Channel.

The RRI Channel is used to indicate the payload size and the sub-packet identifier of the physical layer packet transmitted on the Reverse Traffic Channel. The DSC Channel is used by the access terminal to indicate to the access network the selected serving cell on the Forward Channel. The DRC Channel is used by the access terminal to indicate to the access network the requested Forward Traffic Channel data rate and the selected serving sector on the Forward Channel. The serving sector is the sector that the access terminal selects for receiving the Forward Traffic Channel. The serving cell is the cell that contains the serving sector. The ACK Channel is used by the access terminal to inform the access network whether or not the physical layer packet transmitted on the Forward Traffic Channel has been received successfully. The Auxiliary Pilot Channel is used by the access terminal to aid reverse link channel estimation by the access network.

The Pilot Channel, the RRI Channel, the DSC Channel, the DRC Channel, the ACK Channel, the Data Channel, and the Auxiliary Pilot Channel shall be orthogonally spread by Walsh functions of length 2, 4, 8, 16, or 32. The Data Channel shall be BPSK, QPSK, or 8-PSK modulated. Each modulated stream shall be covered by either a 4-ary Walsh function or a 2-ary Walsh function. The Data Channel shall be B4 modulated (BPSK modulation with 4-ary Walsh cover), Q4 modulated (QPSK modulation with 4-ary Walsh cover), Q2 modulated (QPSK modulation with 2-ary Walsh cover), Q4Q2 modulated (sum of the Q4 and Q2 modulated symbols), or E4E2 modulated (sum of E4 and E2 modulated symbols where E4 and E2 are 8-PSK modulated respectively with 4-ary and 2-ary Walsh covers). Each Reverse Traffic Channel shall be identified by a distinct user long code. The Access Channel for each sector shall be identified by a distinct Access Channel long code.

When the access terminal is transmitting a Reverse Traffic Channel, it shall continuously transmit the Pilot Channel and the RRI Channel. The Pilot Channel shall be transmitted on Walsh channel W_0^{16}. The RRI Channel shall be transmitted on Walsh channel W_4^{16}. The DSC Channel and the ACK Channel shall be time-division multiplexed on Walsh channel W_{12}^{32}. The DSC Channel shall be transmitted on the second half slot on Walsh channel W_{12}^{32} and shall be repeated for *DSCLength* slots, where *DSCLength* is public data of the Forward Traffic Channel MAC Protocol. When the DRC Channel is active, it shall be transmitted for a full slot duration on Walsh channel W_8^{16} and repeated for

DRCLength slots, where *DRCLength* is public data of the Forward Traffic Channel MAC Protocol.

The access terminal shall transmit an ACK Channel bit in response to every Forward Traffic Channel slot that is associated with a detected preamble directed to the access terminal. Otherwise, the ACK Channel shall be gated off. When the ACK Channel bit is transmitted, it shall be time-division multiplexed with the DSC Channel and transmitted on the first half slot on Walsh channel W_{12}^{32}. The access terminal shall transmit the Data Channel as specified by the Reverse Traffic Channel MAC Protocol. When transmitting the Data Channel the access terminal shall transmit the Data Channel on Walsh channel W_2^4or W_1^2, or both.

The access terminal shall transmit the Auxiliary Pilot Channel as specified by the Reverse Traffic Channel MAC Protocol an unmodulated symbols with a binary value of '0' on Walsh channel W_{28}^{32}. The Auxiliary Pilot Channel shall be transmitted during the nth half slot if the transmitted payload during half slots n-1 or n+1 is greater than or equal to *AuxiliaryPilotChannelMinPayload*, which is public data of the Reverse Traffic Channel MAC Protocol. If the Auxiliary Pilot Channel is transmitted during the nth half slot, its power shall be specified relative to the maximum of the Data Channel Gains during half-slots n-1 and n+1 by *AuxiliaryPilotChannelGain*, where *AuxiliaryPilotChannelGain* is public data of the Reverse Traffic Channel MAC Protocol. The Auxiliary Pilot Channel power level shall be updated at the start of every half slot. If the Auxiliary Pilot Channel is transmitted, it uses the Walsh channel identified by the Walsh function W_{28}^{32} and is transmitted on the I-branch.

Walsh Channel Assignments for Physical Layer Reverse Traffic Channel

Channel	Walsh Channel
Pilot	W_0^{16}
Reverse Rate Indicator (RRI)	W_4^{16}
Data Source Control (DSC)	W_{12}^{32}
Data Rate Control (DRC)	W_8^{16}
ACK	W_{12}^{32}
Data	$W_2^4$and/or W_1^2
Auxiliary Pilot	W_{28}^{32}

Subtype 2

Data Rate and Modulation

The Reverse Traffic Channel is used by the access terminal to transmit user-specific traffic or signaling information to the access network. The access terminal supports transmission of information on the Data Channel of the Reverse Traffic Channel at a

variable data rate ranging from of 4.8 kbps to 1843.2 kbps. The access terminal may transmit information on the Reverse Traffic Channel at 1843.2 kbps using the 12288-bit payload, according to *Rate1M8Supported*, which is public data of the Reverse Traffic Channel MAC Protocol. The data rate used on the Data Channel is specified by the Reverse Traffic Channel MAC Protocol. The gain of the Data Channel relative to that of the Pilot Channel for the Reverse Traffic Channel depends on the T2P (traffic-to-pilot power ratio) profile for the transmitted payload size and the transmission mode of the packet. The T2P profile for each payload size and transmission mode is determined by the Reverse Traffic Channel MAC Protocol. The Reverse Traffic Channel MAC Protocol supports two transmission modes, the High Capacity mode and the Low Latency mode. Each transmission mode is characterized by a physical layer transmit duration of one, two, three or four sub-packets. The T2P profile is defined for each payload size for each transmission mode and is characterized by the T2P transition. The T2P transition is the number of sub-packets of a Reverse Traffic Channel packet transmitted from the beginning of the transmission prior to a change in the T2P.

Data Rate and Modulation Parameters for the Reverse Traffic Channel

Payload Size (bits)	Modulation	Effective Data Rate (kbps)				Code Rate [Repetition]			
		After 4 Slots	After 8 Slots	After 12 Slots	After 16 Slots	After 4 Slots	After 8 Slots	After 12 Slots	After 16 Slots
128	B4	19.2	9.6	6.4	4.8	1/5 [3.2]	1/5 [6.4]	1/5 [9.6]	1/5 [12.8]
256	B4	38.4	19.2	12.8	9.6	1/5 [1.6]	1/5 [3.2]	1/5 [4.8]	1/5 [6.4]
512	B4	76.8	38.4	25.6	19.2	1/4 [1]	1/5 [1.6]	1/5 [2.4]	1/5 [3.2]
768	B4	115.2	57.6	38.4	28.8	3/8 [1]	1/5 [1.07]	1/5 [1.6]	1/5 [2.13]
1024	B4	153.6	76.8	51.2	38.4	1/2 [1]	1/4 [1]	1/5 [1.2]	1/5 [1.6]
1536	Q4	230.4	115.2	76.8	57.6	3/8 [1]	1/5 [1.07]	1/5 [1.6]	1/5 [2.13]
2048	Q4	307.2	153.6	102.4	76.8	1/2 [1]	1/4 [1]	1/5 [1.2]	1/5 [1.6]
3072	Q2	460.8	230.4	153.6	115.2	3/8 [1]	1/5 [1.07]	1/5 [1.6]	1/5 [2.13]
4096	**Q2**	**614.4**	**307.2**	**204.8**	**153.6**	**1/2 [1]**	**1/4 [1]**	**1/5 [1.2]**	**1/5 [1.6]**
6144	Q4Q2	921.6	460.8	307.2	230.4	1/2 [1]	1/4 [1]	1/5 [1.2]	1/5 [1.6]
8192	Q4Q2	1228.8	614.4	409.6	307.2	2/3 [1]	1/3 [1]	2/9 [1]	1/5 [1.2]
12288	E4E2	1843.2	921.6	614.4	460.8	2/3 [1]	1/3 [1]	1/3 [1.5]	1/3 [2]

All data transmitted on the Reverse Traffic Channel is encoded, block interleaved, sequence repeated, modulated and orthogonally spread by Walsh function W_2^4 or Walsh function W_1^2 or both. The output of the channel interleaver shall be applied to a modulator that outputs an in-phase stream and a quadrature stream of modulated values. The channel interleaver output is modulated and Walsh covered. The modulator generates BPSK, QPSK, or 8-PSK modulation symbols that are Walsh covered by a 2-ary Walsh cover W_1^2, a 4-ary Walsh cover W_2^4 or both. The modulation and Walsh covering depends on the payload size. The modulation formats are B4, Q4, Q2, Q4Q2, and E4E2. The Data Channel shall be modulated as shown in the Table below.

Data Channel Modulation Formats

Modulation Format	(Modulation, Walsh Function)
B4	(BPSK, W_2^4)
Q4	(QPSK, W_2^4)
Q2	(QPSK, W_1^2)
Q4Q2	(QPSK, W_2^4) + (QPSK, W_1^2)
E4E2	(8-PSK, W_2^4+ (8-PSK, W_1^2)

B4 Modulation: For physical layer packet sizes with payload sizes less than or equal to 1024 bits, each channel interleaver output symbol shall form a B4 modulation symbol (BPSK modulated and Walsh covered by a 4-ary Walsh cover, W_2^4.)

Q4 Modulation: For physical layer packet sizes of 1,536 or 2,048 bits, groups of two successive channel interleaver output symbols shall be grouped to form Q4 modulation symbols (QPSK modulated and 4-ary Walsh covered). Each group of two adjacent block interleaver output symbols, x(2k) and x(2k + 1), k = 0,…, M – 1 shall be mapped into a complex modulation symbol (mI(k), mQ(k)).

Q2 Modulation: For physical layer packet sizes of 3,072 or 4,096 bits, groups of four successive channel interleaver output symbols shall be grouped to form Q2 modulation symbols (QPSK modulated and 2-ary Walsh covered). Each group of four adjacent block interleaver output symbols, x(4k), x(4k + 1), x(4k + 2), x(4k + 3), k = 0,…, M – 1 shall be mapped into a complex modulation symbol (mI(k), mQ(k)).

Q4Q2 Modulation: For physical layer packet sizes of 6,144 or 8,192 bits, groups of six successive channel interleaver output symbols shall be grouped to form Q4Q2 modulation symbols which are the sum of Q4 modulation symbols scaled by 3 / 1 and the Q2 modulation symbols scaled by 3 / 2. Of each group of six adjacent block interleaver output symbols, x(6k), x(6k + 1), x(6k + 2), x(6k + 3), x(6k + 4) and x(6k + 5) for k = 0,…, M – 1, the output symbols, x(6k) and x(6k + 1) are grouped to form Q4 modulation symbols and the output symbols x(6k + 2), x(6k + 3), x(6k + 4) and x(6k + 5) are grouped to form Q2 modulation symbols. The symbols formed due to Q4 and Q2 modulation are then scaled and summed accordingly to form Q4Q2 modulated symbols.

E4E2 Modulation: For physical layer packet size of 12,288 bits, groups of nine successive channel interleaver output symbols shall be grouped to form E4E2 modulation symbols which are the sum of E4 modulation symbols scaled by 3 / 1 and the E2 modulation symbols scaled by 3 / 2. Of each group of nine adjacent block interleaver output symbols, x(9k), x(9k+1), x(9k+2), x(9k+3), x(9k+4), x(9k+5), x(9k+6), x(9k+7), x(9k+8), for k = 0,…, M – 1, the output symbols, x(9k), x(9k+1) and x(9k+2) are grouped to form E4 modulation symbols and the output symbols x(9k+3), x(9k+4), x(9k+5), x(9k+6), x(9k+7), and x(9k+8) are grouped to form E2 modulation symbols. The symbols formed due to E4 and E2 modulation are then scaled and summed according to form E4E2 modulated symbols.

Maximum RF Output Power

Method of Measurement: C.S0033-0 3.1.2.3.4 (Rev. 0)

1. Configure all of the open loop parameters to their maximum settings. Set the following parameters of the *AccessParameters Message* as specified below:

Parameter	Value (Decimal)
OpenLoopAdjust	81 (-81 dB) for BC 0, 2, 3, 5, 7, and 9 84 (-84 dB) for BC 1, 4, 6, and 8
ProbeInitialAdjust	15 (15 dB)
ProbeNumStep	15 (15 probes/sequence)

2. Set the following fields of the *InitialConfiguration* attribute of the Default Access Channel MAC Protocol as specified below:

Parameter	Value (Decimal)
PowerStep	15 (7.5 dB/step)
ProbeSequenceMax	15 (15 sequences)

3. Connect the sector to the access terminal antenna connector as shown in Figure 11.5.1-4. The AWGN generator and the CW generator are not applicable in this test.
4. Set up a Test Application session. Open a connection and configure the Test Application RTAP so that the Reverse Data Channel rate corresponds to 153.6 kbps. Configure the Test Application FTAP so that the Forward Traffic Channel data rate corresponds to the 2-slot version of 307.2 kbps, and the ACK Channel is transmitted at all the slots.
5. Set Îor to –105.5 dBm/1.23 MHz. *(Check latest standards/revisions on -105 dBm)*
6. Send continuously ‘0’ power control bits to the access terminal.
7. Measure the access terminal output power at the access terminal antenna connector.

Method of Measurement: C.S0033-A 4.3.4 (Rev. A)

1. Configure all of the open loop parameters to their maximum settings. Set the following parameters of the *AccessParameters Message* as specified below:

Parameter	Value (Decimal)
OpenLoopAdjust	81 (-81 dB) for BC 0, 2, 3, 5, 7, 9, 10, 11, and 12 84 (-84 dB) for BC 1, 4, 6, and 8
ProbeInitialAdjust	15 (15 dB)
PowerStep	15 (7.5 dB/step)

2. Connect the sector to the access terminal antenna connector as shown in Figure 8.5.1-4. The AWGN generator and the CW generator are not applicable in this test.
3. For each band class that the access terminal supports, configure the access terminal to operate in that band class and perform steps 4 through 7.
4. Set up a Test Application session using one of the Physical Layer subtypes. Open a connection. For Subtype 0 or 1 Physical Layer, configure the Test Application RTAP so that the Reverse Data Channel rate corresponds to 153.6 kbps. For Subtype 2 Physical Layer, configure the Test Application RETAP so that the Reverse Data Channel payload size corresponds to 4096 bits with Termination Target of 16 slots. Configure the Test Application FTAP (for Subtype 0 or 1 Physical Layer) or FETAP (for Subtype 2 Physical Layer) so that the Forward Traffic Channel data rate corresponds to the 2-slot version of 307.2 kbps, and the ACK Channel is transmitted 4 at all the slots.
5. Set $\hat{I}_{or}$ to –60 dBm/1.23 MHz. *(Check latest standards/revisions on -60 dBm)*
6. Send continuously ‘0’ power control bits to the access terminal.
7. Measure the mean access terminal output power at the access terminal antenna connector.

1x Ev-Do Summary Notes

- **1x Ev-Do**: IP-based single-channel Data Only / Data Optimized High Rate Packet Data
  - uses same channel layout and spreading rate as CDMA 2000
  - not backward compatible with 1x RTT; packet switched only; circuit switched not allowed
  - 26.667 ms frames of 16 slots each (1.667 ms) at 1.2288 Mcps
  - HARQ is used to limit retransmission of data packets
  - can use same amplifier, combiners and antennas in CDMA 2000
  - 1x Ev-Do cannot overlaid CDAMA-2000 channels; requires a pair of dedicated 1.25 MHz channels
  - no soft handoff in downlink, soft handoffs in uplink only
- **downlink**:
  - downlink is always at full power using a rate control scheme instead of a power control scheme
    - BS transmits packets at times when MS rate request is high
  - data is TDM to various MS with only one served at a time
  - MS measures S/N on every forward pilot slot (1.667 ms) and sends data rate request to BS (DRC)
    - BS decides which MS to serve next in scheduling
  - HARQ with IR using 4-slot interlacing and early termination by ACK channel
  - traffic channel:
    - QPSK, 8-PSK and 16-QAM
    - I/Q channels mapped into 16 parallel Walsh covers, each of length 16
    - each user transmission starts with a preamble containing user ID, data rate info etc
    - power control bits are sent in parallel as part of the MAC channel to all mobiles, with each assigned a different 64-bit Walsh code
      - code 0-3 are reserved, 4 is the RA (sector busy) cover; 5-63 are for RPC
    - pilot is gated on for 192 chips per slot only, middle of each two half slots
- **uplink**:
  - channels: BPSK only
    - RRI (Reverse Rate Indication) – indicates date rate used by MS; replaces power control bits
    - DRC (Data Rate Control) – 4 bits per slot for up to 16 choices of transmission rate to request for downlink data rate and indicate preferred serving sector
    - ACK (Acknowledge channel) – transmitted by MS after detection of preamble in a frame; 1 bit per half slot
  - pilot is punctured in 7:1 ratio on each slot (7 pilot, 1 data); underlying data is coded at 3 bits per frame (26.667 ms)
  - all signaling is performed in the data channel (there is no Dedicated Channel)
  - Data Channel supports 5 data rates: 9.6 – 153.6 kbps through varying repeat factor
    - 153.6 kbps uses Turbo coder with low gain
  - long code used for spreading is seeded with fixed pattern at start of every Pilot sequence (26.667 ms); separate 42-bit masks are used for the I/Q long spreading codes
- **Ev-Do Revisions**
  - Rev. 0 (IS-856, August 2001):
    - Gold Multicast at reported sector rate of up to 409.6 kbps
    - 2.4 Mbps downlink, 153.6 kbps uplink

        - uplink latency > 100 ms
    - Rev. A (TIA-856-A, March 2004): commercially available in 2nd quarter of 2006
        - advanced QoS to prioritize individual packets to reduce latency, multimedia capabilities
            - allows network to prioritize traffic according to MS profile and/or packet types
        - improved uplink peak rate and sector throughput – 3.1 Mbps downlink, 1.8 Mbps uplink
        - uplink improvements –
            - higher modulation schemes with larger packet sizes – QPSK, 8-PSK
            - BS supports 4-branch receive diversity in reverse link
            - HARQ in both uplink and downlink
            - PIC (pilot interference cancellation) – reduces interference from MS pilots and can increase network capacity by up to 20%
        - downlink improvements –
            - new channels – DSC & auxiliary pilot
            - packet quantization – 12 different types of packets in reverse link
                - B4, Q4, Q2, B4Q2, E4E2 modulation with combinations of BPSK, QPSK & 8-PSK
        - support integrated voice & data services such as VOIP & video calls (not part of standard)
        - Platinum Multicast at reported sector rates up to 1.5 Mbps using OFDM interleaved with CDMA signals
        - uplink latency is 50% less than Rev. 0
        - number of power control bits increased form 59 (Rev. 0) to 114; therefore more users
    - Rev. B (expected 1st quarter of 2006): scalable bandwidth (commercially available, late 2007)
        - Nx- Ev-Do
        - logically combines up to 15 Ev-Do Rev. A carriers in forward and/or reverse link above the PHY layer via software
        - channels are not combined physically; therefore, integrity of 1.25 MHz carrier is preserved
        - new MS with multiple transmit and/or receive paths required to achieve higher data rates
    - Rev. C: could start in 2006
        - may include smart antenna (SDMA or MIMO), OFDM and wider channel bandwidths
- **Test Application Protocol** (FTAP & RTAP, C.S0029)
    - FTAP: Forward Test Application Protocol
        - specifies procedures & messages to control the Forward Traffic Channel (FTC) and
        - configure associated reverse channels
        - specifies generation & transmission of test packets sent on FTC for purpose of testing FTC
        - specifics statistics collection procedures as seen at the AT to meet RTAP requirements
    - RTAP: Reverse Test Application Protocol
        - specifies procedures and messages to control and configure Reverse Traffic Channel (RTC)
        - generates test packets sent on RTC for testing the channel

- RTAP packet size determined by lower layers, negotiated during session configuration
- AT assigns transmission priority 55 to RTAP Test packets
- AT buffers at least 16 RTAP Test Packets
- AT sets priority of RTAP Fill Packets to 255

o FETAP and RETAP used for Rev. A

APPENDIX C: WCDMA Transmitter Configuration Info

(For Release 99 and Release 5 Only)

The information contained in this Appendix only applies to frequency division duplex (FDD) WCDMA devices. WCDMA uses a wider bandwidth than CDMA 2000 1x, 3.84 MHz as opposed to 1.23 MHz. The channelization codes used in WCDMA is known as OVSF (orthogonal variable spreading factor) codes, which is similar to the Walsh codes used in CDMA 2000. The length of these codes or the spreading factor (SF) can be configured from 4 to 512 (256 for uplink). The resulting symbol rate is equal to the system chip rate of 3.84 Mcps divided by the SF. The SF may change as often as every 10 ms (1 frame). This enables efficient allocation of resources such as bandwidth and data capacity.

Power control is implemented in both uplink and downlink. The radio link supports simultaneous data channels, which may include bi-directional voice, video, packet data and signaling messages. Each of these is represented by a unique data channel within a single frequency carrier through transport channels that support sharing physical resources between multiple services. The transport channels are multiplexed via one or more physical channels. High data rate services or a combination of low data rate services may be multiplexed onto several physical channels.

3GPP defines 7 SF and data rates for the physical channels. Reference Measurement Channels (RMC, See TS 25.101 and TS 34.121) are also defined to enable stable measurement conditions using Test Loop Modes (See TS 34.109). The uplink contains 1 DPCCH and may contain up to 6 DPDCHs (Dedicated Physical Control and Data Channels). Information on device operating capabilities can generally be retrieve during registration through call processing while establishing a connection to the device with a communication test set. The operating parameters for WCDMA are defined in the various 3GPP standards, which may be downloaded at http://www.3gpp.org/specs/specs.htm.

The test protocols used to evaluate WCDMA handsets and data modems for SAR compliance must address both the operating configurations and exposure conditions of the UE. The exact test procedures may vary among test laboratories due to differences in test equipment setup, which are generally acceptable, provided the procedures are equivalent and test results are always consistent. The UE may operate with multiple code channels for voice and data calls. The maximum average output power for each applicable operating/exposure configuration should be determined according to the operating capabilities of an individual UE. The output of active code channels should be verified with code domain power measurements to ensure the code channel power levels/ratios are within specifications. The UE should be controlled by a communication test set according to defined call setup and processing requirements to establish the required radio link and operating parameters for SAR testing. The relevant parameters

for both uplink and downlink should be documented to the extent that would enable the tests to be repeated with minimal difficulties using similar equipment.

Definitions

Maximum Output Power: This is a measure of the maximum power the UE can transmit (i.e. the actual power as would be measured assuming no measurement error) in a bandwidth of at least (1+ α) times the chip rate of the radio access mode. The period of measurement shall be at least one timeslot.

Nominal Maximum Output Power: This is the nominal power defined by the UE power class.

Mean power: When applied to a WCDMA modulated signal this is the power (transmitted or received) in a bandwidth of at least (1+ α) times the chip rate of the radio access mode. The period of measurement shall be at least one timeslot unless otherwise stated.

UE (User Equipment): user equipment that is under test.

TC (Test Control): UE protocol entity used by the SS to control the UE specific testing functions.

Abbreviations

PAR	Peak to Average Ratio
P-CCPCH	Primary Common Control Physical Channel
P-CPICH	Primary Common Pilot Channel
S-CCPCH	Secondary Common Control Physical Channel
S-CPICH	Secondary Common Pilot Channel
SCH	Synchronisation Channel consisting of Primary and Secondary synchronisation channels
LB	Loop Back
RAB	Radio Access Bearer
RB	Radio Bearer
TC	Test Control
UICC	UMTS Integrated Circuit Card
SS	System Simulator; see Annex A for description
CPICH	Common Pilot Channel
DCH	Dedicated Channel
DL	Downlink
DPCCH	Dedicated Physical Control Channel
DPCH	Dedicated Physical Channel
DPDCH	Dedicated Physical Data Channel
HSDPA	High Speed Downlink Packet Access
HS-DSCH	High Speed Downlink Shared Channel
HS-PDSCH	High Speed Physical Downlink Shared Channel
HS-SCCH	High Speed Physical Downlink Shared Control Channel
NACK	Negative Acknowledgement

P-CCPCH	Primary Common Control Physical Channel
PCA	Power Control Algorithm
PCPCH	Physical Common Packet Channel
PDSCH	Physical Downlink Shared Channel
PICH	Paging Indicator Channel
PRACH	Physical Random Access Channel
RACH	Random Access Channel
RL	Radio Link
S-CCPCH	Secondary Common Control Physical Channel
SCH	Synchronisation Channel
SRB	Signaling RB
RAB	Radio Access Bearer
RB	Radio Bearer
RRC	Radio Resource Control (for sub-Layer of layer 3) but also Root-Raised Cosine (for Filter shape)
DPCH	Dedicated Physical Channel
AM	Acknowledgement mode
UM	Unacknowledgement mode
SFN	System Frame Number
TFC	Transport Format Combination
TPC	Transmit Power Control
TrCH	Transport Channel
TTI	Transmission Time Interval
UE	User Equipment
UL	Uplink
UTRAN	UMTS Terrestrial Radio Access Network
I_{or}	The total transmit power spectral density (integrated in a bandwidth of (1+α) times the chip rate and normalized to the chip rate) of the downlink signal at the Node B antenna connector
$\hat{I}_{or}$	The received power spectral density (integrated in a bandwidth of (1+α) times the chip rate and normalized to the chip rate) of the downlink signal as measured at the UE antenna connector.
I_{oc}	The power spectral density of a band limited white noise source (simulating interference from cells, which are not defined in a test procedure) as measured at the UE antenna connector. The power spectral density of a band limited white noise source (simulating interference from other cells) as measured at the UE antenna connector.

Frequency Bands

Operating Band	UL Frequencies UE transmit, Node B receive	DL frequencies UE receive, Node B transmit
I	1920 – 1980 MHz	2110 –2170 MHz
II	**1850 –1910 MHz**	**1930 –1990 MHz**
III	1710-1785 MHz	1805-1880 MHz

Operating Band	UL Frequencies UE transmit, Node B receive	DL frequencies UE receive, Node B transmit
IV	**1710-1755 MHz**	**2110-2155 MHz**
V	**824 – 849 MHz**	**869-894 MHz**
VI	830-840 MHz	875-885 MHz
VII	**2500-2570 MHz**	**2620-2690 MHz**
VIII	880 - 915 MHz	925 - 960 MHz
IX	1749.9-1784.9 MHz	1844.9-1879.9 MHz
X	1710-1770 MHz	2110-2170 MHz

Note: See TS25.307 for Band IV, V, VI and IX

Channel Spacing

The nominal channel spacing is 5 MHz, but this can be adjusted to optimize performance in a particular deployment scenario.

Channel Raster

The channel raster is 200 kHz for all bands, which means the center frequency must be an integer multiple of 200 kHz. In addition a number of additional center frequencies are also specified, which means the center frequencies for these channels are shifted 100 kHz relative to the general raster.

UARFCN

Channel Number

The carrier frequency is designated by the UTRA Absolute Radio Frequency Channel Number (UARFCN). The UARFCN values are defined as follows:

UARFCN Definition (general)

Band	UPLINK (UL) UE transmit, Node B receive			DOWNLINK (DL) UE receive, Node B transmit		
	UARFCN formula offset	Carrier frequency (F_{UL}) range [MHz]		UARFCN formula offset	Carrier frequency (F_{DL}) range [MHz]	
	F_{UL_Offset} [MHz]	F_{UL_low}	F_{UL_high}	F_{DL_Offset} [MHz]	F_{DL_low}	F_{DL_high}
I	0	1922.4	1977.6	0	2112.4	2167.6
II	0	1852.4	1907.6	0	1932.4	1987.6
III	1525	1712.4	1782.6	1575	1807.4	1877.6
IV	1450	1712.4	1752.6	1805	2112.4	2152.6
V	0	826.4	846.6	0	871.4	891.6
VI	0	832.4	837.6	0	877.4	882.6
VII	2100	2502.4	2567.6	2175	2622.4	2687.6
VIII	340	882.4	912.6	340	927.4	957.6
IX	0	1752.4	1782.4	0	1847.4	1877.4
X	1135	1712.4	1767.6	1490	2112.4	2167.6

UARFCN Definition (additional channels)

Band	UPLINK (UL) UE transmit, Node B receive		DOWNLINK (DL) UE receive, Node B transmit	
	UARFCN formula offset F_{UL_Offset} [MHz]	Carrier frequency [MHz] (F_{UL})	UARFCN formula offset F_{DL_Offset} [MHz]	Carrier frequency [MHz] (F_{DL})
II	1850.1	1852.5, 1857.5, 1862.5, 1867.5, 1872.5, 1877.5, 1882.5, 1887.5, 1892.5, 1897.5, 1902.5, 1907.5	1850.1	1932.5, 1937.5, 1942.5, 1947.5, 1952.5, 1957.5, 1962.5, 1967.5, 1972.5, 1977.5, 1982.5, 1987.5
IV	1380.1	1712.5, 1717.5, 1722.5, 1727.5, 1732.5, 1737.5 1742.5, 1747.5, 1752.5	1735.1	2112.5, 2117.5, 2122.5, 2127.5, 2132.5, 2137.5, 2142.5, 2147.5, 2152.5
V	670.1	826.5, 827.5, 831.5, 832.5, 837.5, 842.5	670.1	871.5, 872.5, 876.5, 877.5, 882.5, 887.5
VII	2030.1	2502.5, 2507.5, 2512.5, 2517.5, 2522.5, 2527.5, 2532.5, 2537.5, 2542.5, 2547.5, 2552.5, 2557.5, 2562.5, 2567.5	2105.1	2622.5, 2627.5, 2632.5, 2637.5, 2642.5, 2647.5, 2652.5, 2657.5, 2662.5, 2667.5, 2672.5, 2677.5, 2682.5, 2687.5

The following UARFCN range shall be supported for each paired band

UTRA Absolute Radio Frequency Channel Number

Band	Uplink (UL)		Downlink (DL)	
	General	Additional	General	Additional
II	9262 to 9538	12, 37, 62, 87, 112, 137, 162, 187, 212, 237, 262, 287	9662 to 9938	412, 437, 462, 487, 512, 537, 562, 587, 612, 637, 662, 687
IV	1312 to 1513	1662, 1687, 1712, 1737, 762, 787, 1812, 1837, 1862	1537 to 1738	1887, 1912, 1937, 1962, 1987, 2012, 2037, 2062, 2087
V	4132 to 4233	782, 787, 807, 812, 837, 862	4357 to 4458	1007, 1012, 1032, 1037, 1062, 1087
VII	2012 to 2338	2362, 2387, 2412, 2437, 2462, 2487, 2512, 2537, 2562, 2587, 2612, 2637, 2662, 2687	2237 to 2563	2587, 2612, 2637, 2662, 2687, 2712, 2737, 2762, 2787, 2812, 2837, 2862, 2887, 2912

FDD reference test frequencies for Operating Band II

Test Frequency ID	UARFCN	Frequency of Uplink	UARFCN	Frequency of Downlink
Low Range	9263	1852.6 MHz	9663	1932.6 MHz
Mid Range	9400	1880 MHz	9800	1960 MHz
High Range	9537	1907.4 MHz	9937	1987.4 MHz

FDD reference test frequencies for Operating Band IV

Test Frequency ID	UARFCN	Frequency of Uplink	UARFCN	Frequency of Downlink
Low Range	1313	1712.6 MHz	1538	2112.6 MHz
Mid Range	1450	1740.0 MHz	1675	2140.0 MHz
High Range	1512	1752.4 MHz	1737	2152.4 MHz

FDD reference test frequencies for Operating Band V

Test Frequency ID	UARFCN	Frequency of Uplink	UARFCN	Frequency of Downlink
Low Range	4133	826.6 MHz	4358	871.6 MHz
Mid Range	4175	835 MHz	4400	880 MHz
High Range	4232	846.4 MHz	4457	891.4 MHz

FDD reference test frequencies for Operating Band VII

Test Frequency ID	UARFCN	Frequency of Uplink	UARFCN	Frequency of Downlink
Low Range	2013	2502.6 MHz	2238	2622.6 MHz
Mid Range	2175	2535.0 MHz	2400	2655.0 MHz
High Range	2337	2567.4 MHz	2562	2687.4 MHz

Maximum Output Power

The nominal maximum output power and its tolerance are defined according to the Power Class of the UE. The maximum output power is a measure of the maximum power the UE can transmit (i.e. the actual power as would be measured assuming no measurement error) in a bandwidth of at least (1+ α) times the chip rate of the radio access mode. The period of measurement shall be at least one timeslot. The UE maximum output power shall be within the nominal value and tolerance specified below even for the multi-code transmission mode. All the parameters are defined using the UL reference measurement channel (12.2 kbps) specified in clause C.2.1 of 3GPP TS 34.121 and unless stated otherwise, with the UL power control ON.

Nominal Maximum Output Power

Operating Band	Power Class 1		Power Class 2		Power Class 3 (3bis)		Power Class 4	
	Power (dBm)	Tol (dB)	Power (dBm)	Tol (dB)	Power (dBm)	Tol (dB)	Power (dBm)	Tol (dB)
II	-	-	-	-	+24	+1/-3	+21	+2/-2
IV	-	-	-	-	+24	+1/-3		
V	-	-	-	-	+24 (+23)	+1/-3 (+2/-2)	+21	+2/-2
VII	-	-	-	-	+24	+1/-3		

The normative reference for this requirement is TS 25.101 clause 6.2.1.

Physical Channels

Physical channels are defined by a specific carrier frequency, scrambling code, channelization code (optional), time start & stop (giving a duration) and, on the uplink, relative phase (0 or $\pi/2$). Time durations are defined by start and stop instants, measured in integer multiples of chips. Suitable multiples of chips also used in specification are:

- Radio frame: A radio frame is a processing duration which consists of 15 slots. The length of a radio frame corresponds to 38400 chips.
- Slot: A slot is a duration which consists of fields containing bits. The length of a slot corresponds to 2560 chips.
- Subframe: A subframe is the basic time interval for HS-DSCH transmission and HS-DSCH-related signaling at the physical layer. The length of a subframe corresponds to 3 slots (7680 chips).

Transport channels are described (in more abstract higher layer models of the physical layer) as capable of being mapped to physical channels. Within the physical layer itself the exact mapping is from a composite coded transport channel (CCTrCH) to the data part of a physical channel. In addition to data parts there also exist channel control parts and physical signals.

Physical Channels

Physical Channel	Minimum Number	Comment
P-CCPCH	1	Primary Common Control Physical Channel. This is used by the Cell to Broadcast System Information messages; it is transmitted using the Primary Scrambling Code for the Cell.
P-CPICH	1	Primary Common Pilot Channel using the Primary Scrambling Code for the Cell.
S-CPICH	1 (For RF Tests)	Secondary Common Pilot Channel. This signal is used as the phase reference for some RF tests.
SCH	1	Synchronisation Channel (includes P-SCH and S-SCH)
S-CCPCH	2	Secondary Common Control Physical Channel.
PICH	1	To identify when the UE should access the PCCH for Paging Messages.
AICH	1	General Acquisition Indicator Channel that can be used for: - Acquisition Indicator Channel, for PRACH - Access Preamble Acquisition Indicator Channel (AP-ICH), for PCPCH - Collision-Detection/Channel-Assignment Indicator Channel (CD/CA-ICH), for PCPCH

Physical Channel	Minimum Number	Comment
DPDCH	3	Downlink Physical Data Channel. There will be a single DPCCH associated with all the DPDCHs used for Layer 1 signaling. This number is for the First Cell. Additional Cells may define a lower number which should be at least 1.
PDSCH	1	Physical Downlink Shared Channel.
DPCH	1	Uplink Dedicated Physical Channel
PRACH	2	Physical Random Access Channel.
PCPCH	1	Physical Common Packet Channel.
CSICH	1	CPCH Status Indicator Channel

The downlink physical channels and output level requirements that are needed for setting a connection and channels that are needed during a connection for transmitter characteristics measurements are given in the following.

Channel Powers for Non-HSDPA Test Cases		
Downlink Physical Channel without dedicated connection (TS 34.121, E.2.2)		
Physical Channel	**Power relative to Output Channel Power I_{or}**	**Power relative to P-CPICH**
Output Channel Power (I_{or})	Test dependent power <I_{or}>	<I_{or}>
P-CPICH	–3.9 dB	<I_{or}> – 3.9 dB
P-CCPCH	–8.3 dB	–4.4 dB
SCH	–8.3 dB (set P-SCH and S-SCH to –11.3 dB)	–4.4 dB (set P-SCH and S-SCH to –7.4 dB)
PICH	–8.3 dB	–4.4 dB
S-CCPCH	–5.3 dB	–6.4 dB
OCNS	Turned off	Turned off

Downlink Physical Channel for TX tests (TS 34.121, E.3.1)			
Physical Channel	**Power relative to DPCH**	**Power relative to Output Channel Power I_{or}**	**Power relative to P-CPICH**
I_{or}	–93 dBm/3.84 MHz	–93 dBm/3.84 MHz	–93 dBm/3.84 MHz
P-CPICH	7 dB	–3.3 dB	–96.3 dBm
P-CCPCH	5 dB	–5.3 dB	–2 dB
SCH	5 dB (set both SCHs to –8 dB)	–5.3 dB (set both SCHs to –8.3 dB)	–2 dB (set both SCHs to –5 dB)

PICH	2 dB	–8.3 dB	–5 dB
DPCH	–103.3 dBm/3.84 MHz	–10.3 dB	–7 dB
OCNS	Turned off	Turned off automatically	Turned off

Dedicated Uplink Physical Channels

There are three types of uplink dedicated physical channels, the uplink Dedicated Physical Data Channel (uplink DPDCH), the uplink Dedicated Physical Control Channel (uplink DPCCH), and the uplink Dedicated Control Channel associated with HS-DSCH transmission (uplink HS-DPCCH). The DPDCH, the DPCCH and the HS-DPCCH are I/Q code multiplexed.

The initial uplink DPCCH transmit power is set by higher layers. Subsequently the uplink transmit power control procedure simultaneously controls the power of a DPCCH and its corresponding DPDCHs (if present). The relative transmit power offset between DPCCH and DPDCHs is determined by the network and is computed using the gain factors signaled to the UE using higher layer signaling.

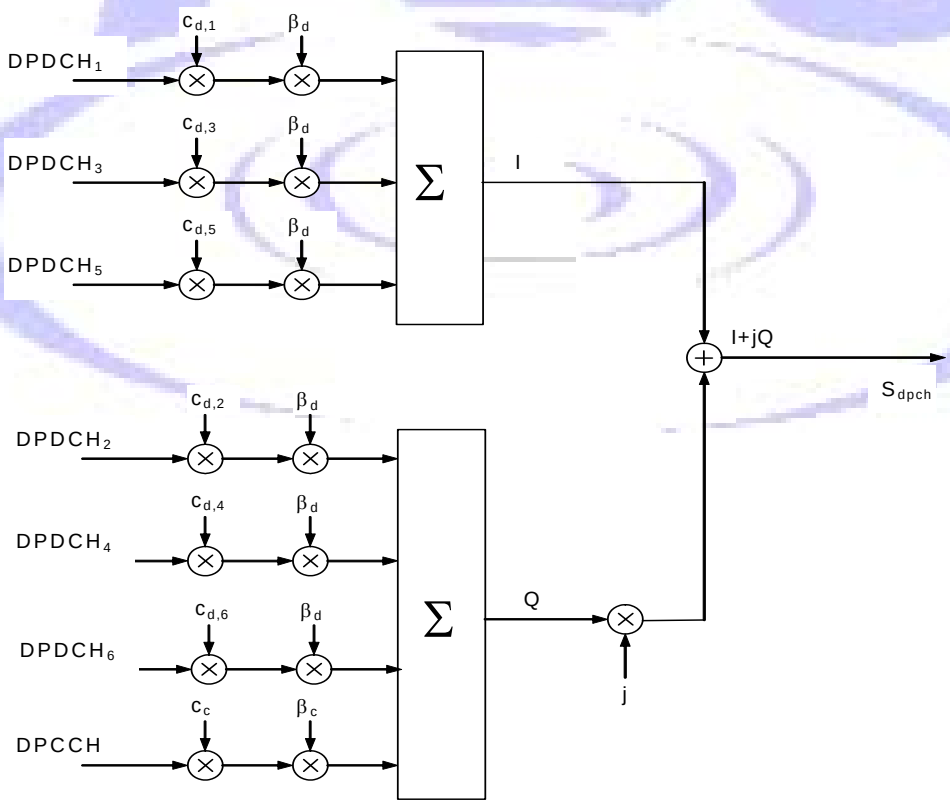

Spreading for Uplink DPCCH/DPDCH$_n$

The DPCCH is spread to the chip rate by the channelization code c_c. The nth DPDCH called $DPDCH_n$ is spread to the chip rate by the channelization code $c_{d,n}$. After channelization, the real-valued spread signals are weighted by gain factors, β_c for DPCCH, β_d for all DPDCHs. The β_c and β_d values are signaled by higher layers. At every instant in time, at least one of the values β_c and β_d has the amplitude 1.0. The β_c and β_d values are quantized into 4 bit words. The quantization steps are given in the Table below.

The Quantization of the Gain Parameters

Signaled values for β_c and β_d	Quantized amplitude ratios β_c and β_d
15	1.0
14	14/15
13	13/15
12	12/15
11	11/15
10	10/15
9	9/15
8	8/15
7	7/15
6	6/15
5	5/15
4	4/15
3	3/15
2	2/15
1	1/15
0	Switch off

The uplink DPDCH is used to carry the DCH transport channels. There may be zero, one, or several uplink DPDCHs on each radio link. The uplink DPCCH is used to carry control information generated at Layer 1. The Layer 1 control information consists of known pilot bits to support channel estimation for coherent detection, transmit power-control (TPC) commands, feedback information (FBI), and an optional transport-format combination indicator (TFCI). The TFCI informs the receiver about the instantaneous transport format combination of the transport channels mapped to the simultaneously transmitted uplink DPDCH radio frame. There is one and only one uplink DPCCH on each radio link. The figure below shows the frame structure of the uplink DPDCH and the uplink DPCCH. Each 10 ms radio frame is split into 15 slots, each of length T_{slot} = 2560 chips, corresponding to one power-control period. DPDCH and DPCCH are always frame aligned with each other.

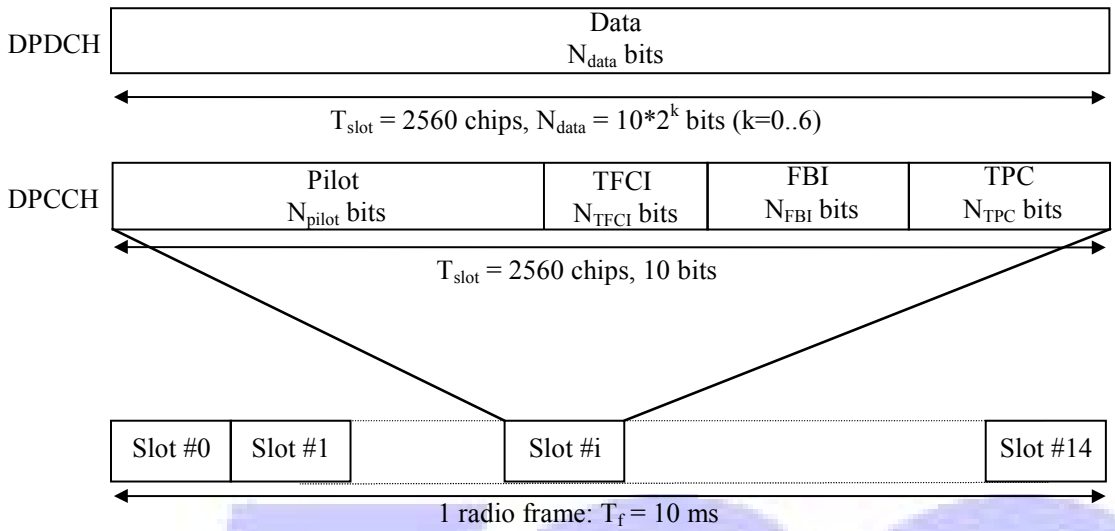

Frame Structure for Uplink DPDCH/DPCCH

The parameter k in the figure determines the number of bits per uplink DPDCH slot. It is related to the spreading factor of DPDCH as SF = $256/2^k$. The DPDCH spreading factor may range from 256 down to 4. The spreading factor of the uplink DPCCH is always equal to 256, i.e. there are 10 bits per uplink DPCCH slot. The exact number of bits for uplink DPDCH and the different uplink DPCCH fields (N_{pilot}, N_{TFCI}, N_{FBI}, and N_{TPC}) are given in the DPCCH time slot format section below. The slot format to use is configured by higher layers. The channel bit and symbol rates given below in the Channelization Codes section are the rates immediately before spreading.

Channelization Codes

Multi-code operation is possible for the uplink dedicated physical channels. When multi-code transmission is used, several parallel $DPDCH_n$ are transmitted using different channelization codes. However, there is only one DPCCH per radio link. Data rates, channelization codes and spreading factor information for DPCCH and $DPDCH_n$ are indicated in the following Table. Spreading Rate (SF) * Symbol Rate = 3.84 Mcps. Multiple $DPDCH_n$ are used when $DPDCH_1$ reaches 960 kbps. Additional $DPDCH_n$ use 960 kbps and a spreading factor of 4. The channelization code $C^k_{SF=4}$ for $DPDCH_n$ requires spreading codes k=1 for $DPDCH_{1,2}$, k=2 for $DPDCH_{5,6}$ and k=3 for $DPDCH_{3,4}$.

	Channel Bit Rate (kbps)	Channel Symbol Rate (ksps)	Spreading Factor	Spreading Code Number	Bits/Slot
DPCCH	15	15	256	0	10
$DPDCH_1$	15	15	256	64	10
	30	30	128	32	20
	60	60	64	16	40
	120	120	32	8	80
	240	240	16	4	160

	Channel Bit Rate (kbps)	Channel Symbol Rate (ksps)	Spreading Factor	Spreading Code Number	Bits/Slot
	480	480	8	2	320
	960	960	4	1	640
$DPDCH_n$	960	960	4	1, 2, 3	640

Uplink DPCCH Time Slot Format

Ten control bits are available per time slot on the uplink DPCCH, consisting of the pilot, TPC TFCI and FBI information bits as indicated in the following Table. The pilot is a fixed bit sequence used for synchronization and is mandatory for DPCCH. The transport format combination identifier (TFCI) identifies the structure of the transmitted transport channels. It is optional and is needed only for multiple multiplexed transport channels. The transmit power control (TPC) symbol is for continuous transmit power control and is mandatory for DPCCH. The feedback indicator (FBI) symbol is optional. It is used by the UE to control reception diversity when two different antennas are used for transmission at a node B.

Slot Format	N_{Pilot}	N_{TPC}	N_{TFCI}	N_{FBI}
0	6	2	2	0
1	8	2	0	0
2	5	2	2	1
3	7	2	0	1
4	6	2	0	2
5	5	1	2	2

Radio Access Bearer (RAB) and Signaling Radio Bearer (SRB)

Reference radio bearer configurations are typical configurations of the radio interface. This subset of the mandatory set of radio bearer configurations supported by the UE is used as the UE test configurations. The reference radio bearer configurations are used in the radio bearer interoperability test cases, see clause 14 of TS 34.123-1. The reference radio bearer configurations are also intended as the first choice for other test cases where a radio bearer configuration is needed. For test cases requiring alternative configurations not provided by the reference radio bearer configurations the specific radio bearer configurations are specified in the actual test case itself. In case where the configurations are used by more than one test case these common radio bearer configurations are specified in clause 6.11 of TS 34.108.

NOTE: If not specifically specified then the mid-value of the RM attribute value range as specified by the actual reference radio bearer configuration shall be applied for testing.

Prioritized RAB

#	Traffic class	SSD	Max. rate, kbps	CS/PS
1	Conversational	Speech	UL:12.2 DL:12.2	CS
1a	Conversational	Speech	UL:(12.2 7.95 5.9 4.75) DL:(12.2 7.95 5.9 4.75)	CS
2	Conversational	Speech	UL:10.2 DL:10.2	CS
2a	Conversational	Speech	UL:(10.2, 6.7, 5.9, 4.75) DL:(10.2, 6.7, 5.9, 4.75)	CS
3	Conversational	Speech	UL:7.95 DL:7.95	CS
4	Conversational	Speech	UL:7.4 DL:7.4	CS
4a	Conversational	Speech	UL:(7.4, 6.7, 5.9, 4.75) DL:(7.4, 6.7, 5.9, 4.75)	CS
5	Conversational	Speech	UL:6.7 DL:6.7	CS
6	Conversational	Speech	UL:5.9 DL:5.9	CS
7	Conversational	Speech	UL:5.15 DL:5.15	CS
8	Conversational	Speech	UL:4.75 DL:4.75	CS
9	Conversational	Unknown	UL:28.8 DL:28.8	CS
10	Conversational	Unknown	UL:64 DL:64	CS
11	Conversational	Unknown	UL:32 DL:32	CS
12	Streaming	Unknown	UL:14.4 DL:14.4	CS
13	Streaming	Unknown	UL:28.8 DL:28.8	CS
14	Streaming	Unknown	UL:57.6 DL:57.6	CS
15	Void			
15a	Streaming	Unknown	UL:16 DL:64	PS
16	Void			
17	Void			
18	Void			
19	Void			
20	Interactive or Background	N/A	UL:32 DL:8	PS
20a	Interactive or Background	N/A	UL:8 DL:8	PS
20b	Interactive or Background	N/A	UL:16 DL:16	PS
20c	Interactive or Background	N/A	UL:32 DL:32	PS
21	Void			
22	Interactive or Background	N/A	UL:32 DL:64	PS
23	Interactive or Background	N/A	UL:64 DL:64	PS
24	Interactive or Background	N/A	UL:64 DL:128	PS
25	Interactive or Background	N/A	UL:128 DL:128	PS
26	Interactive or Background	N/A	UL:64 DL:384	PS
27	Interactive or Background	N/A	UL:128 DL:384	PS
28	Interactive or Background	N/A	UL:384 DL:384	PS
29	Interactive or Background	N/A	UL:64 DL:2048	PS
30	Interactive or Background	N/A	UL:128 DL:2048	PS

31	Void			
32	Interactive or Background	N/A	UL:64 DL:256	PS
33	Interactive or Background	N/A	UL:0 DL:32	PS
34	Interactive or Background	N/A	UL:32 DL:0	PS
35	Interactive or Background	N/A	UL:64 DL:144	PS
36	Interactive or Background	N/A	UL:144 DL:144	PS
37	Conversational	N/A	UL:42.8 DL:42.8	PS (Rel-5)
38	Conversational	Speech	UL:(12.65 8.85 6.6) DL:(12.65 8.85 6.6)	CS (Rel-5)
39	Interactive or Background	N/A	UL:64 DL:768	PS (Rel-5)

SRB

#	Maximum rate, kbps	Logical channel	Physical Ch onto which SRB is mapped
1	UL:1.7 DL:1.7	DCCH	DPCH
2	UL:3.4 DL:3.4	DCCH	DPCH
3	UL:13.6 DL:13.6	DCCH	DPCH
4	DL:27.2 (alt. 40.8)	DCCH	SCCPCH
5	UL:16.6	CCCH	PRACH
6	DL:30.4 (alt. 45.6)	CCCH	SCCPCH
7	DL:33.2 (alt. 49.8)	BCCH	SCCPCH
8	DL:24 (alt. 6.4)	PCCH	SCCPCH
9	DL:0.15	DCCH	DPCH (Rel-5)

Test Loop Mode

Test loop functions shall be capable of being activated when a test USIM is present. USIM, in general, is described in TS 31.101. Test USIM data fields are described in TS 34.108. The UE test loop function provides access to isolated functions of the UE via the radio interface without introducing new physical interfaces just for the reason of conformance testing.

NOTE: It should be emphasised that the UE test loop function only describes the functional behavior of the UE with respect to its external interfaces; physical implementation of the UE test loop function is completely left open to the manufacturer.

The UE test loop function is activated by transmitting the appropriate Test Control (TC) message to the UE. The UE test loop function can be operated in three different loopback modes: UE test loop mode 1 and 2 are mandatory for all UEs. The UE test loop mode 3 is mandatory for UEs supporting MBMS (Multimedia Broadcast Multicast Service).

For UE test loop mode 1 the loopback point is located above Layer 2. Depending on the actual radio bearer setup loopback is performed on RLC SDUs or PDCP SDUs according to the procedure specified in subclause 5.3.3.2 (TS 34.109). The loop back point for UE test loop mode 1 has been selected above Layer 2 to separate the protocol configurations from the UE test loop function. By configuration of RLC and MAC layers other loop back points may functionally be achieved. For example, by transparent configuration of

RLC and MAC layer functional loop back point at Transport channel level can be achieved to implement the reference measurement channels as specified by TS 34.121, Annex C for FDD.

For UE operating in UE test loop mode 1 the loopback delay requirement is not applicable for unacknowledged mode radio bearers configured on HS-DSCH and E-DPDCH.

NOTE: UE test loop mode 1 is used for E-DCH RF performance testing. For these test cases unacknowledged mode radio bearer configurations for HS-DSCH and E-DPDCH are used. This means that the data rate may vary depending on absolute and relative grants given by the SS. In addition overflow of UE UM buffer may happen as SS needs to guarantee continuous data in uplink.

For UE test loop mode 2 both data and CRC are looped back. UE test loop mode 2 is intended for Blind Transport Format Detection (BTFD) testing and BLER testing of DL 12.2 kbps reference measurement channel for which loopback of downlink CRC is required. UE test loop mode 2 can also be used for BLER testing of DL 64, 144 and 384 kbps reference measurement channels if the UE supports these UL reference measurement channels. Both received data and CRC bits for the DCH transport channel used for the BTFD test case are returned according to procedure specified in subclause 5.3.3.3 (TS 34.109). For UE test loop mode 2 to work correctly ciphering shall be disabled. For UE operating in UE test loop mode 2 the loopback delay requirement is applicable for any radio bearer configuration.

In UE test loop mode 3, the UE is required to count RLC SDUs received on a given MTCH, which must have been configured in the UE prior to closing UE test loop mode 3. When the CLOSE UE TEST LOOP message is received by the UE, the counter value is reset to zero. After this, every user data block successfully received by the UE on the chosen MTCH shall cause the counter value to be incremented by one. A 32 bit counter shall be used and the UE counter value is undefined if more than 4294967295 RLC SDUs have been received by the UE. For UE operating in UE test loop mode 3, the received data is only counted, and is not looped back to the SS so the loopback delay requirement is not applicable.

A specific radio bearer test mode is specified to be used together with the UE test loop function. The purpose of the radio bearer test mode is to put the UE into a mode where: SS can set up radio bearers to be terminated in the UE test loop function without having to involve CC or SM; and to disable any control mechanisms in NAS protocols or in any UE applications that otherwise could cause the RRC connection to be released.

Adaptive Multi-Rate (AMR)

The AMR speech coder consists of a multi-rate speech coder and an error concealment mechanism to combat the effects of transmission errors and lost packets. A source controlled rate scheme including a voice activity detector and a comfort noise generation system is employed by the multi-rate coder. The multi-rate speech coder is a single

integrated speech codec with eight source rates from 4.75 kbps to 12.2 kbps with a low rate background noise encoding mode. The speech coder is capable of switching its bit-rate, upon command, in each 20 ms speech frame. An AMR speech codec capable UE shall support all source rates listed in the following.

Codec mode	Source codec bit-rate	Note
AMR_12.20	12,20 kbps (GSM EFR)	1. Assuming SID frames are continuously transmitted 2. GSM-EFR is the 3GPP TS 26.090 Enhanced Full Rate Speech Codec (also identical to the TIA TDMA-US1 Enhanced speech codec) 3. IS-641is the TIA/EIA IS-641 TDMA Enhanced Full Rate Speech Codec 4. PDC-EFR is the ARIB 6.7 kbps Enhanced Full Rate Speech Codec
AMR_10.20	10,20 kbps	
AMR_7.95	7,95 kbps	
AMR_7.40	7,40 kbps (IS-641)	
AMR_6.70	6,70 kbps (PDC-EFR)	
AMR_5.90	5,90 kbps	
AMR_5.15	5,15 kbps	
AMR_4.75	4,75 kbps	
AMR_SID	1,80 kbps (see note 1)	

UL Reference Measurement Channel

12.2 kbps UL Reference Measurement Channel

The parameters for the 12.2 kbps UL reference measurement channel are specified in Table C.2.1.1, Table C 2.1.2, Table C 2.1.3 and Table C.2.1.4. The channel coding for information is shown in figure C.2.1.

Table C.2.1.1: 12.2 kbps UL RMC Physical Parameters

Parameter	Level	Unit
Information bit rate	1	kbps
DPDCH	60	kbps
DPCCH	15	kbps
DPCCH Slot Format #i	0	-
DPCCH/DPDCH power ratio	–5.46	dB
TFCI	On	-
Repetition	23	%
NOTE: Slot Format #2 is used for closed loop tests in clause 7.6.2. Slot Format #2 and #5 are used for site selection diversity transmission tests in subclause 7.6.3.		

Table C.2.1.2: 12.2 kbps UL RMC Transport Channel Parameters (RLC-TM for DTCH)

Higher Layer	RAB/Signaling RB	RAB	SRB
RLC	Logical channel type	DTCH	DCCH
	RLC mode	TM	UM/AM
	Payload sizes, bit	244	88/80
	Max data rate, bps	12200	2200/2000
	PDU header, bit	N/A	8/16
	TrD PDU header, bit	0	N/A
MAC	MAC header, bit	0	4

Higher Layer	RAB/Signaling RB		RAB	SRB
	MAC multiplexing		N/A	Yes
Layer 1	TrCH type		DCH	DCH
	Transport Channel Identity		1	5
	TB sizes, bit		244	100
	TFS	TF0, bits	0*244	0*100
		TF1, bits	1*244	1*100
	TTI, ms		20	40
	Coding type		Convolution Coding	Convolution Coding
	Coding Rate		1/3	1/3
	CRC, bit		16	12
	Max number of bits/TTI after channel coding		804	360
	Uplink: Max number of bits/radio frame before rate matching		402	90
	RM attribute		256	256

Table C.2.1.3: 12.2 kbps UL RMC Transport Channel Parameters (RLC-AM for DTCH)

Higher Layer	RAB/Signaling RB		RAB	SRB
RLC	Logical channel type		DTCH	DCCH
	RLC mode		AM	UM/AM
	Payload sizes, bit		228	88/80
	Max data rate, bps		11400	2200/2000
	PDU header, bit		16	8/16
	TrD PDU header, bit		N/A	N/A
MAC	MAC header, bit		0	4
	MAC multiplexing		N/A	Yes
Layer 1	TrCH type		DCH	DCH
	Transport Channel Identity		1	5
	TB sizes, bit		244	100
	TFS	TF0, bits	0*244	0*100
		TF1, bits	1*244	1*100
	TTI, ms		20	40
	Coding type		Convolution Coding	Convolution Coding
	Coding Rate		1/3	1/3
	CRC, bit		16	12
	Max number of bits/TTI after channel coding		804	360

Higher Layer	RAB/Signaling RB	RAB	SRB
	Uplink: Max number of bits/radio frame before rate matching	402	90
	RM attribute	256	256

Table C.2.1.4: UL reference measurement channel, TFCS (12.2 kbps)

TFCS size	4
TFCS	(DTCH, DCCH)=(TF0, TF0), (TF1, TF0), (TF0, TF1), (TF1, TF1)

NOTE: The TFCs except for (TF1, TF1) are belonging to minimum set of TFCs.

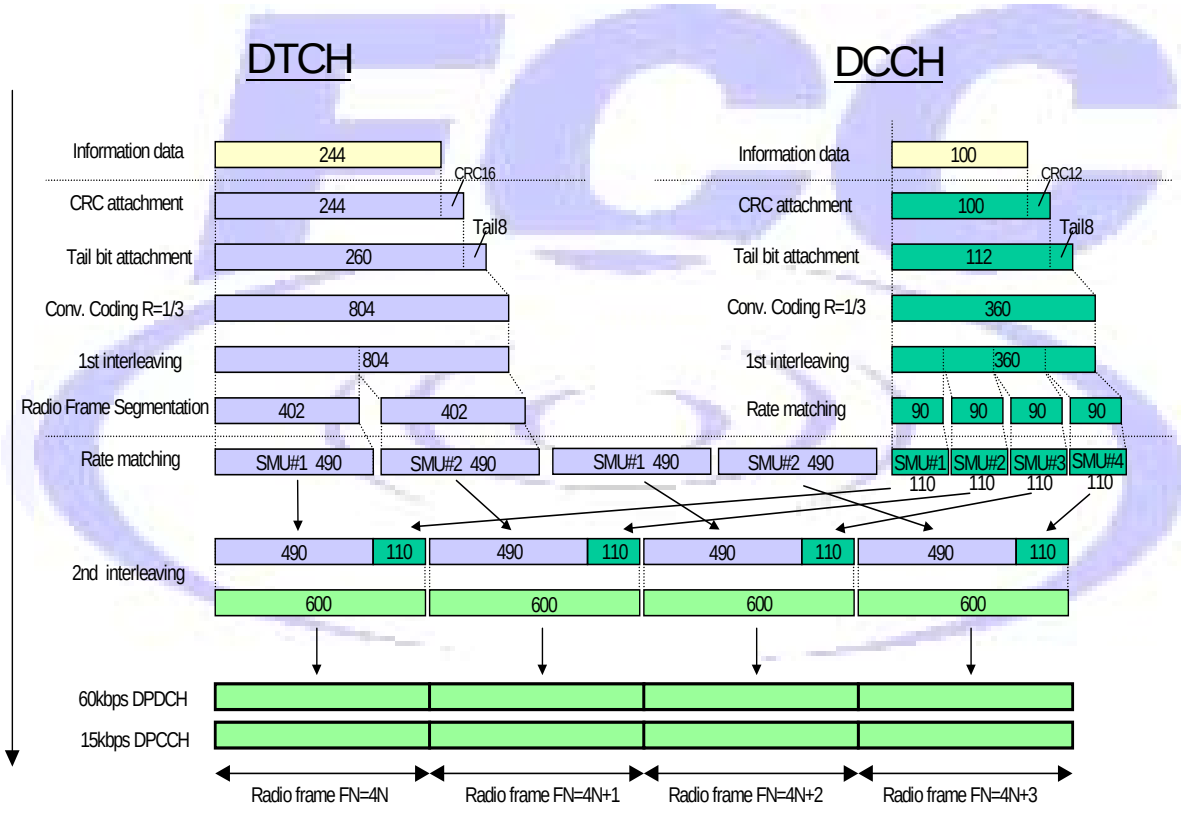

Figure C.2.1: Channel coding of 12.2 kbps UL RMC

64 kbps UL Reference Measurement Channel

The parameters for the 64 kbps UL reference measurement channel are specified in Table C.2.2.1, Table C.2.2.2, Table C.2.2.3 and Table C.2.2.4. The channel coding for information is shown in figure C.2.2.

Table C.2.2.1: 64 kbps UL RMC physical parameters

Parameter	Level	Unit
Information bit rate	64	kbps
DPDCH	240	kbps
DPCCH	15	kbps
DPCCH Slot Format #i	0	-
DPCCH/DPDCH	–9.54	dB
TFCI	On	-
Repetition	18	%

Table C.2.2.2: 64 kbps UL RMC transport channel parameters (RLC-TM for DTCH)

Higher Layer	RAB/Signaling RB		RAB	SRB
RLC	Logical channel type		DTCH	DCCH
	RLC mode		TM	UM/AM
	Payload sizes, bit		1280	88/80
	Max data rate, bps		64000	2200/2000
	PDU header, bit		N/A	8/16
	TrD PDU header, bit		0	N/A
MAC	MAC header, bit		0	4
	MAC multiplexing		N/A	Yes
Layer 1	TrCH type		DCH	DCH
	Transport Channel Identity		1	5
	TB sizes, bit		1280	100
	TFS	TF0, bits	0*1280	0*100
		TF1, bits	1*1280	1*100
	TTI, ms		20	40
	Coding type		Turbo Coding	Convolution Coding
	Coding Rate		N/A	1/3
	CRC, bit		16	12
	Max number of bits/TTI after channel coding		3900	360
	Uplink: Max number of bits/radio frame before rate matching		1950	90
	RM attribute		256	256

Table C.2.2.3: 64 kbps UL RMC transport channel parameters (RLC-AM for DTCH)

Higher Layer	RAB/Signaling RB		RAB	SRB
RLC	Logical channel type		DTCH	DCCH
	RLC mode		AM	UM/AM
	Payload sizes, bit		1264	88/80
	Max data rate, bps		63200	2200/2000
	PDU header, bit		16	8/16
	TrD PDU header, bit		N/A	N/A
MAC	MAC header, bit		0	4
	MAC multiplexing		N/A	Yes
Layer 1	TrCH type		DCH	DCH
	Transport Channel Identity		1	5
	TB sizes, bit		1280	100
	TFS	TF0, bits	0*1280	0*100
		TF1, bits	1*1280	1*100
	TTI, ms		20	40
	Coding type		Turbo Coding	Convolution Coding
	Coding Rate		N/A	1/3
	CRC, bit		16	12
	Max number of bits/TTI after channel coding		3900	360
	Uplink: Max number of bits/radio frame before rate matching		1950	90
	RM attribute		256	256

Table C.2.2.4: UL reference measurement channel, TFCS (64 kbps)

TFCS size	4
TFCS	(DTCH, DCCH)=(TF0, TF0), (TF1, TF0), (TF0, TF1), (TF1, TF1)

NOTE: The TFCs except for (TF1, TF1) are belonging to minimum set of TFCs.

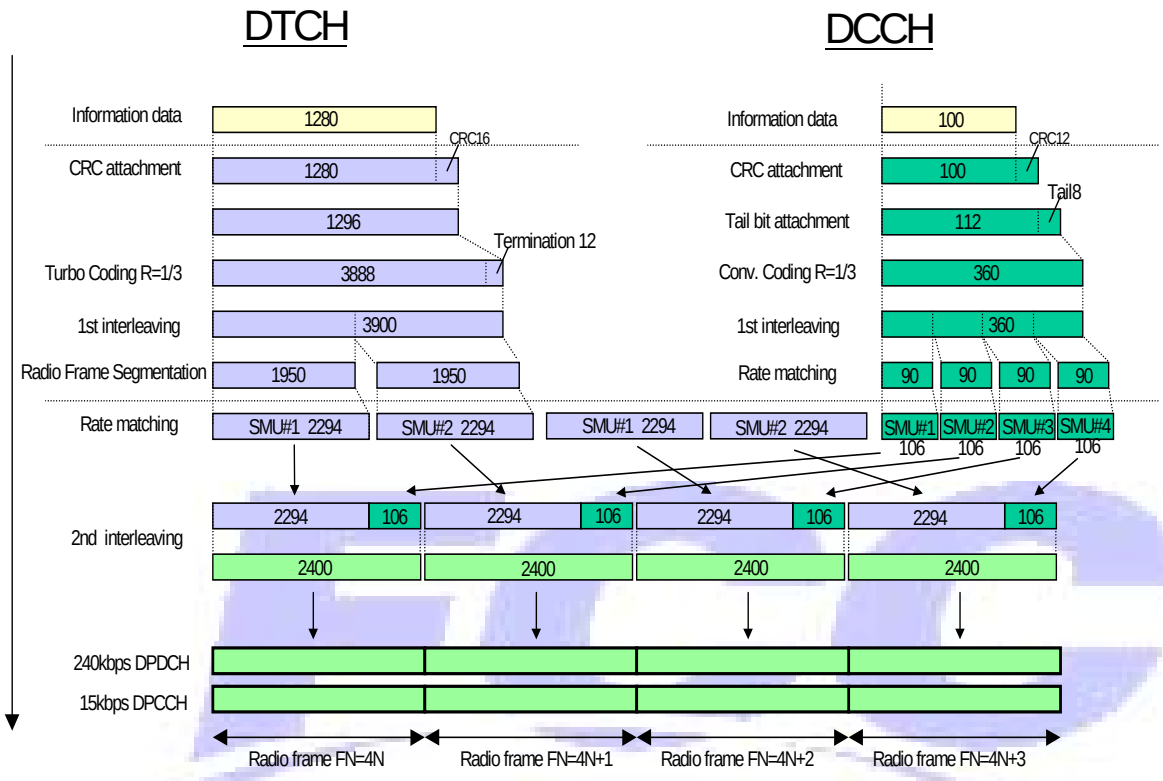

Figure C.2.2: Channel coding of 64 kbps UL RMC

144 kbps UL Reference Measurement Channel

The parameters for the 144 kbps UL reference measurement channel are specified in Table C.2.3.1, Table C.2.3.2, Table C.2.3.3 and Table C.2.3.4. The channel coding for information is shown in figure C.2.3.

Table C.2.3.1: 144 kbps UL RMC physical parameters

Parameter	Level	Unit
Information bit rate	144	kbps
DPDCH	480	kbps
DPCCH	15	kbps
DPCCH Slot Format #i	0	-
DPCCH/DPDCH power ratio	–11.48	dB
TFCI	On	-
Repetition	8	%

Table C.2.3.2: 144 kbps UL RMC transport channel parameters (RLC-TM for DTCH)

Higher Layer	RAB/Signaling RB		RAB	SRB
RLC	Logical channel type		DTCH	DCCH
	RLC mode		TM	UM/AM
	Payload sizes, bit		2880	88/80
	Max data rate, bps		144000	2200/2000
	PDU header, bit		N/A	8/16
	TrD PDU header, bit		0	N/A
MAC	MAC header, bit		0	4
	MAC multiplexing		N/A	Yes
Layer 1	TrCH type		DCH	DCH
	Transport Channel Identity		1	5
	TB sizes, bit		2880	100
	TFS	TF0, bits	0*2880	0*100
		TF1, bits	1*2880	1*100
	TTI, ms		20	40
	Coding type		Turbo Coding	Convolution Coding
	Coding Rate		N/A	1/3
	CRC, bit		16	12
	Max number of bits/TTI after channel coding		8700	360
	Uplink: Max number of bits/radio frame before rate matching		4350	90
	RM attribute		256	256

Table C.2.3.3: 144 kbps UL RMC transport channel parameters (RLC-AM for DTCH)

Higher Layer	RAB/Signaling RB		RAB	SRB
RLC	Logical channel type		DTCH	DCCH
	RLC mode		AM	UM/AM
	Payload sizes, bit		2864	88/80
	Max data rate, bps		143200	2200/2000
	PDU header, bit		16	8/16
	TrD PDU header, bit		N/A	N/A
MAC	MAC header, bit		0	4
	MAC multiplexing		N/A	Yes
Layer 1	TrCH type		DCH	DCH
	Transport Channel Identity		1	5
	TB sizes, bit		2880	100
	TFS	TF0, bits	0*2880	0*100
		TF1, bits	1*2880	1*100

Higher Layer	RAB/Signaling RB	RAB	SRB
	TTI, ms	20	40
	Coding type	Turbo Coding	Convolution Coding
	Coding Rate	N/A	1/3
	CRC, bit	16	12
	Max number of bits/TTI after channel coding	8700	360
	Uplink: Max number of bits/radio frame before rate matching	4350	90
	RM attribute	256	256

Table C.2.3.4: UL reference measurement channel, TFCS (144 kbps)

TFCS size	4
TFCS	(DTCH, DCCH)=(TF0, TF0), (TF1, TF0), (TF0, TF1), (TF1, TF1)

NOTE: The TFCs except for (TF1, TF1) are belonging to minimum set of TFCs.

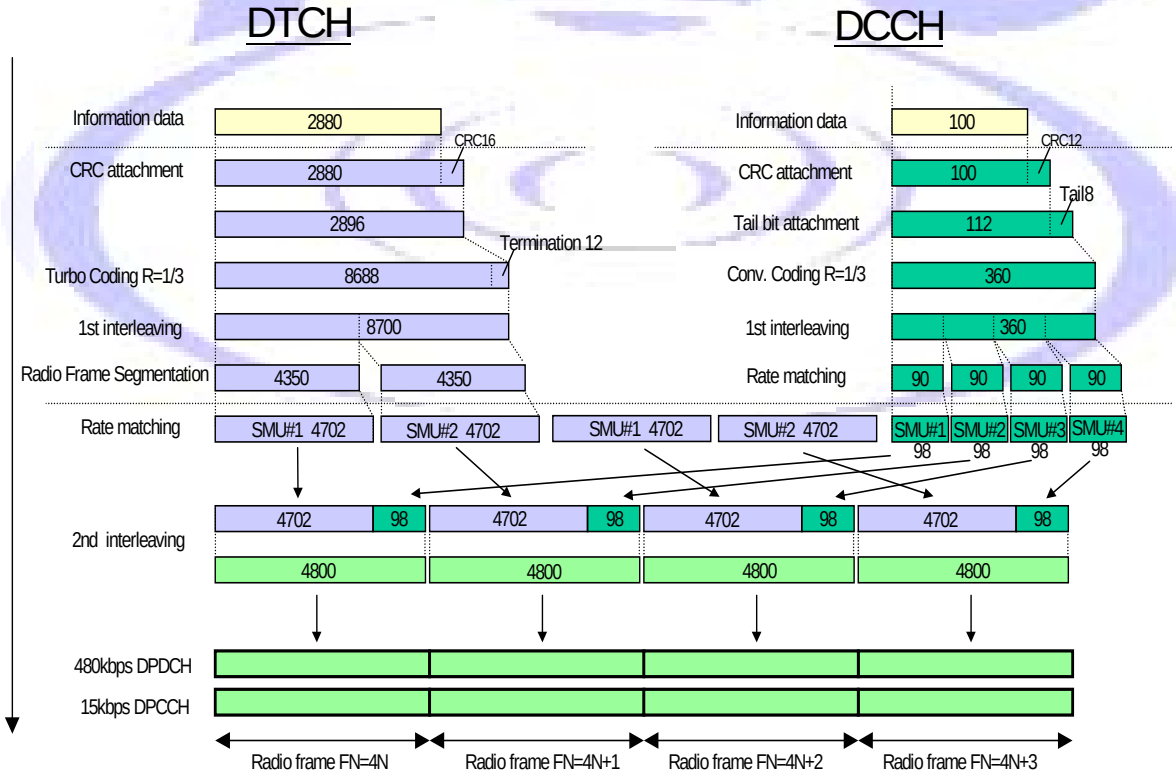

Figure C.2.3: Channel coding of 144 kbps UL RMC

384 kbps UL Reference Measurement Channel

The parameters for the 384 kbps UL reference measurement channel are specified in Table C.2.4.1, Table C.2.4.2, Table C.2.4.3 and Table C.2.4.4. The channel coding for information is shown in figure C.2.4.

Table C.2.4.1: 384 kbps UL RMC physical parameters

Parameter	Level	Unit
Information bit rate	384	kbps
DPDCH	960	kbps
DPCCH	15	kbps
DPCCH Slot Format #i	0	-
DPCCH/DPDCH power ratio	-11.48	dB
TFCI	On	-
Puncturing	18	%

Table C.2.4.2: 384 kbps UL RMC transport channel parameters (RLC-TM for DTCH)

Higher Layer	RAB/Signaling RB		RAB	SRB
RLC	Logical channel type		DTCH	DCCH
	RLC mode		TM	UM/AM
	Payload sizes, bit		3840	88/80
	Max data rate, bps		384000	2200/2000
	PDU header, bit		N/A	8/16
	TrD PDU header, bit		0	N/A
MAC	MAC header, bit		0	4
	MAC multiplexing		N/A	Yes
Layer 1	TrCH type		DCH	DCH
	Transport Channel Identity		1	5
	TB sizes, bit		3840	100
	TFS	TF0, bits	0*3840	0*100
		TF1, bits	1*3840	1*100
	TTI, ms		10	40
	Coding type		Turbo Coding	Convolution Coding
	Coding Rate		N/A	1/3
	CRC, bit		16	12
	Max number of bits/TTI after channel coding		11580	360
	Uplink: Max number of bits/radio frame before rate matching		11580	90
	RM attribute		256	256

Table C.2.4.3: 384 kbps UL RMC transport channel parameters (RLC-AM for DTCH)

Higher Layer	RAB/Signaling RB		RAB	SRB
RLC	Logical channel type		DTCH	DCCH
	RLC mode		AM	UM/AM
	Payload sizes, bit		3824	88/80
	Max data rate, bps		382400	2200/2000
	PDU header, bit		16	8/16
	TrD PDU header, bit		N/A	N/A
MAC	MAC header, bit		0	4
	MAC multiplexing		N/A	Yes
Layer 1	TrCH type		DCH	DCH
	Transport Channel Identity		1	5
	TB sizes, bit		3840	100
	TFS	TF0, bits	0*3840	0*100
		TF1, bits	1*3840	1*100
	TTI, ms		10	40
	Coding type		Turbo Coding	Convolution Coding
	Coding Rate		N/A	1/3
	CRC, bit		16	12
	Max number of bits/TTI after channel coding		11580	360
	Uplink: Max number of bits/radio frame before rate matching		11580	90
	RM attribute		256	256

Table C.2.4.4: UL reference measurement channel, TFCS (384 kbps)

TFCS size	4
TFCS	(DTCH, DCCH)=(TF0, TF0), (TF1, TF0), (TF0, TF1), (TF1, TF1)

NOTE: The TFCs except for (TF1, TF1) are belonging to minimum set of TFCs.

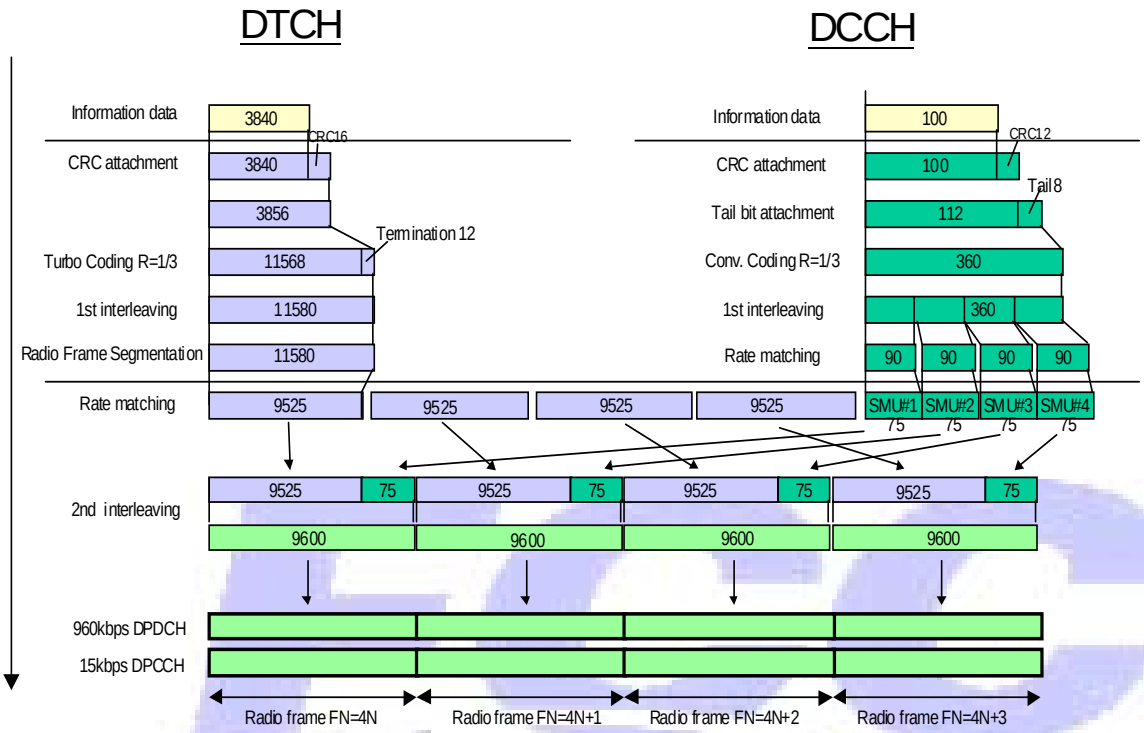

Figure C.2.4: Channel coding of 384 kbps UL RMC

768 kbps UL Reference Measurement Channel

The parameters for the UL measurement channel for 768 kbps are specified in Table C.2.5.1, Table C.2.5.2, Table C.2.5.3 and Table C.2.5.4.

Table C.2.5.1: 768 kbps UL RMC physical parameters

Parameter	Level	Unit
Information bit rate	2*384	kbps
DPDCH1	960	kbps
DPDCH2	960	kbps
DPCCH	15	kbps
DPCCH Slot Format #i	0	-
DPCCH/DPDCH power ratio	-11.48	dB
TFCI	On	-
Puncturing	18	%

Table C.2.5.2: 768 kbps UL RMC transport channel parameters (RLC-TM for DTCH)

Higher Layer	RAB/Signaling RB		RAB	SRB
RLC	Logical channel type		DTCH	DCCH
	RLC mode		TM	UM/AM
	Payload sizes, bit		7680	88/80
	Max data rate, bps		768000	2200/2000
	PDU header, bit		N/A	8/16
	TrD PDU header, bit		0	N/A
MAC	MAC header, bit		0	4
	MAC multiplexing		N/A	Yes
Layer 1	TrCH type		DCH	DCH
	Transport Channel Identity		1	5
	TB sizes, bit		3840	100
	TFS	TF0, bits	0*3840	0*100
		TF1, bits	2*3840	1*100
	TTI, ms		10	40
	Coding type		Turbo Coding	Convolution Coding
	Coding Rate		N/A	1/3
	CRC, bit		16	12
	Max number of bits/TTI after channel coding		23160	360
	Uplink: Max number of bits/radio frame before rate matching		23160	90
	RM attribute		256	256

Table C.2.5.3: 768 kbps UL RMC transport channel parameters (RLC-AM for DTCH)

Higher Layer	RAB/Signaling RB		RAB	SRB
RLC	Logical channel type		DTCH	DCCH
	RLC mode		TM	UM/AM
	Payload sizes, bit		7664	88/80
	Max data rate, bps		766400	2200/2000
	PDU header, bit		16	8/16
	TrD PDU header, bit		N/A	N/A
MAC	MAC header, bit		0	4
	MAC multiplexing		N/A	Yes
Layer 1	TrCH type		DCH	DCH
	Transport Channel Identity		1	5
	TB sizes, bit		3840	100
	TFS	TF0, bits	0*3840	0*100

Higher Layer	RAB/Signaling RB		RAB	SRB
		TF1, bits	2*3840	1*100
	TTI, ms		10	40
	Coding type		Turbo Coding	Convolution Coding
	Coding Rate		N/A	1/3
	CRC, bit		16	12
	Max number of bits/TTI after channel coding		23160	360
	Uplink: Max number of bits/radio frame before rate matching		23160	90
	RM attribute		256	256

Table C.2.5.4: UL reference measurement channel, TFCS (768 kbps)

TFCS size	4
TFCS	(DTCH, DCCH)=(TF0, TF0), (TF1, TF0), (TF0, TF1), (TF1, TF1)

NOTE: The TFCs except for (TF1, TF1) are belonging to minimum set of TFCs.

Measurement of Transmitter Characteristics

- The SS sets up the radio bearer for DL and UL reference measurement channels 12.2 kbps using the generic setup procedure.
- See TS 34.108, clause 7 for specification of the generic setup procedure.
- See TS 34.121, subclauses C.2.1 and C.3.1 for definition of the DL and UL reference measurement channel 12.2 kbps for FDD mode.
- The SS orders the UE to close its UE test loop by transmitting a CLOSE UE TEST LOOP CMD message.
- When the SS receives the CLOSE UE TEST LOOP COMPLETE message from the UE the SS starts transmission of data to the UE.
- Perform the transmitter test.

WCDMA Summary Notes

- transmissions are based on 10 ms frames
  - 15 slots/frame, 666.67 µs/slot, 2560 chips/slot
  - power control bits transmitted in every slot, 1500/sec for UL & DL power control
- scrambling code is applied at 3.84 Mcps
  - codes are not orthogonal; interference between two UE may exist
    - used for BTS/UE separation
  - scrambling codes are Gold codes rather than PN codes
    - Gold codes are unique not requiring time offsets like PN codes
      - time synchronization is not necessary
        - UE measures frame timing differential between 2 BTS with info reported to network for 2nd BTS correction during soft handoff
    - 512 unique Gold codes available for cell site separation
  - SSC in S-SCH instructs UE to search a given set of 64 Gold codes
    - each given set has 8 scrambling codes (8x64=512)
    - UE tries 8 codes to decode BCH
- OVSF codes are orthogonal (like Walsh codes)
  - used to separate code channels (channelization code)
- spreading code length (SF) range
  - UL: 4 – 512
  - DL: 4 – 256
- symbol rate = chip rate (3.84 Mcps) / SF
  - spreading gain = chip rate / symbol rate
  - processing gain = chip rate / bit rate (raw)
  - SF may change in each frame (10 ms); data rate is dynamic
- data rate support
  - 144 kbps for mobile (vehicular)
  - 384 kbps for portable (pedestrian)
  - 2 Mbps for fixed installations
- Layer 3 (RRC) is for network control
- Layer 2 (MAC + RLC) is for data link control, assigns logical channels
- Layer 1 (PHY) is connected to Layer 2 through transport channels
- **downlink**
  - physical channels
    - CPICH: Common Pilot Channel: a continuous loop broadcast of BTS scrambling code
    - P-CCPCH (Primary Common Control Physical Channel) is time multiplexed with P-SCH & S-SCH in each time slot
      - P-SCH & S-SCH (Primary & Secondary Synchronization Channels) in 1st 256 chips
        - P-SCH has Primary Synchronization Code (PSC) broadcasted by all BTS
        - S-SCH has Secondary Synchronization Code (SSC)
          - representing a group of 16 sub-codes each 256 chips
          - UE decodes 15 consecutive SSC to determine BTS frame boundary timing and to aid identifying scrambling code when establishing connection
      - P-CCPCH in rest of 2304 of 2560 chips
        - has 18 bits of broadcast data (BCH) information at 15 kbps
        - transmitting all the broadcast parameters may span several frames

- S-CCPCH: Secondary Common Control Physical Channel
  - contains paging and signaling info to idling UE
- AICH to acknowledge UE access requests
- PICH (Paging Indication Channel) to alert UE of forthcoming page message
- PDSCH (Physical Downlink Shared Channel) to send packets to multiple UE
- DPDCH/DPCCH: Dedicated Physical Data and Control Channels
  - DPCH (Dedicated Physical Channel) contains time multiplexed DPDCH & DPCCH
  - DPDCH has user voice & signaling data + layer 3 (network) signaling data, each with individual error coding, interleaving and multiplexed to form DPDCH
  - DPCCH contains time multiplexed
    - TPC (transmit power control) bits
    - TFCI (transport format combination indication) bits on slot format & rate information
    - embedded pilot bits for short synchronization patterns within each slot
  - multiple DPDCHs are used to increase throughput of a single UE

- BTFD (Blind Transport Format Detection) is used at UE when TFCI is not sent
- CCTrCH (Coded Composite Transport Channel) contains multiplexed logical channels that are interleaved and rate matched

- **uplink**
  - physical channels
    - PRACH: Physical Random Access Channel
      - contains preamble followed by multiplexed control and data used by UE to request network connection
      - control has pilot & TFCI (Transmit Format Combination Indication)
    - PCPCH: Physical Common Packet Channel
      - a random access channel used for UL packet data transmission
      - more efficient than dedicated data channel for small quantities of data
      - may span several frames
      - BTS controls PCPCH transmit power
    - DPDCH: Dedicated Physical Data Channel
      - carries payload data and signaling data
      - 1st DPDCH on I path, additional $DPDCH_n$ are split between I/Q
      - $DPDCH_1$ @ 960, 480, 240, 120, 60, 30, 15 ksps; $C_{4,\ 8,\ 16,\ 32,\ 64,\ 128,\ 256}^{SF/4}$
      - $DPDCH_n$ @ C_4^k, when $DPDCH_1 > 960$ ksps; k = 1, 2, 3 for $DPDCH_{1,2}$, $DPDCH_{5,6}$, $DPDCH_{3,4}$; $n \leq 6$
    - DPCCH: Dedicated Physical Control Channel
      - always uses SF=256 (C_{256}^0) and 15 kbps on Q path
      - contains TPC, TFCI, FBI and pilot; UE uses FBI to provide BTS antenna diversity feedback
  - DTCH and DCCH (logical channels) are encoded and multiplexed to form CCTrCH and mapped to DPDCH
- **$DPDCH_n$ and DPCCH**
  - each BPSK encoded and assigned to I/Q paths
  - spread with OVSF and scramble with HPSK
  - RCC (root raised cosine) filtered and applied to the QPSK modulator
- **TFCS**: Transport Format Combination Set
  - set of formats communicated between network & UE during connection setup

- o includes all allowable TF and data capacity for each of the channels that can be in the link and all TFC (Transport Format Combinations) for the link
  - inclusion of TFCI (Transport Format Combination Indicator) in each frame
  - or use BTFD (Blind Transport Format Detection)

- **Test Models and Reference Measurement Channels**
  - o DL Test Models and UL RMC are used to test BTS conformance
    - 5 Test Models available, including 1 for HSDPA in Release 5
    - 5 RMC – 12.2, 64, 144, 384, 2048 kbps
      - 1 DPDCH and 1 DPCCH, except for 2048 kbps with 6 DPDCH
  - o UL/DL RMC are used to test UE conformance
    - DL RMC: 12.2, 64, 144, 384 kbps
    - UL RMC: 12.2, 64, 144, 384, 768 kbps
      - only 768 kbps RMC has 2 DPDCH
    - 12.2 kbps UL RMC consists of DPCCH+$DPDCH_1$
      - DPCCH is -5.46 dB < DPDCH
    - UE conformance tests require loopback test mode through SS (system simulator)
    - UE maximum power is measured in a BW of (1+α) times chip rate in at least 1 slot duration (Rel. 99 TS 34.121, 5.2)
- **Common Test Environment specification (TS 34.108)**
  - o replicate real services, channel may not be in one stable configuration
  - o may not be suitable for some measurements
- **Loopback Entity and Test Control**
  - o test control provides a radio bearer test mode and a method for controlling the loop back entity
    - UE is placed in radio bearer test mode to accept radio bearer setup request within UE capabilities and to connect radio bearer to loopback entity
  - o type 1 loopback
    - all RLC (radio link control) SDU (service data units) received on traffic-plane radio bearers are retransmitted on the uplink of such bearers
    - received bits are repeated to fill uplink RLC SDU if UL BW > DL BW
    - received bits are truncated if UL BW < DL BW
    - typically used for BER measurements
  - o type 2 loopback
    - loopback is directly above Layer 1
    - loops back transport block plus checksum
    - require UL BW > DL BW to include checksum; else bits are truncated
- **power control loops**
  - o outer loop – used by network to set a signal quality level for desired QoS
  - o open loop – used in initial access and hard handoff
  - o inner loop (fast closed loop) – in accordance with TPC received in DL
    - TPC received every slot
    - changes in 1, 2 or 3 dB steps for the next slot; 3 dB in compressed mode only

Abbreviations

AMR	Adaptive Multi Rate voice channel
ACS	AMR Active Code Set A-M
BTFD	Blind Transport Format Detection

CCTrCH	Coded Composite Transport Channels
FBI	Feedback Information
PDCP	Packet Data Convergence Protocol
PDSCH	Physical Downlink Shared Channel
PRACH	Physical Random Access Channel
RAB	Radio Access Bearer
RLCAM	Radio Link Control Acknowledge Mode
RMC	Reference Measurement Channel
RSCP	Received Signal Code Power
SRB	Signaling Radio Bearer (data rate)
TFCI	Transport Format Combination Indicator
TPC	Transmit Power Control
TTI	Transmission Time Interval (slot)

UE Power Classes (averaged over a slot):

1	33 dBm, 2 W, +1/-3 dB
2	27 dBm, ½ W, +1/-3 dB
3	24 dBm, ¼ W, +1/-3 dB
4	21 dBm, ⅛ W, +/- 2dB

UE minimum output power < -50 dBm
UE OFF power < -56 dBm
CPICH RSCP > -95 dBm

1 slot = 666.7 µs
15 slots / frame
4096 frames / period @ (10 ms / frame) and (41 sec / period)
38400 chips / frame, 2560 chips / slot
Uplink offset = 1024 chips
(SF)*(Symbol Rate) = 3.84 Mcps

Uplink channel no – 5 MHz channel @ 25 increments -
Band II (1850 – 1910 MHz):
200 kHz raster – 9262 – 9538 (1852.4 – 1907.6 MHz)
100 kHz raster – 12 – 287 (1852.5 – 1907.5 MHz)
Band V (824 – 849 MHz)
200 kHz raster – 4132 – 4233 (826.4 – 846.6 MHz)
100 kHz raster – 782 – 862 (826.5 – 842.5 MHz)

Downlink Signals:
Synchronization – P-CPICH, P-SCH, S-SCH
Broadcast – P-CCPCH, S-CCPCH, PICH, AICH
Dedicated physical channel – DPCH (DPDCH, DPCCH)

If device connects when Authentication & Security is disabled and does not connect in RMC when Test Mode is disabled; check for incorrect SIM/USIM that prevent authentication

APPENDIX D: Release 5 HSDPA Transmitter Configuration Info

HSDPA is an evolution of the downlink shared channel (DSCH) in Release 99 WCDMA. The fast power control and variable spreading factor of DSCH in WCDMA are replaced by shorter packets, AMC and HARQ etc. in HSDPA to increase downlink data rates and system capacity for packet data. TDM and CDM are used to accommodate packet data bursts with more efficient spectrum use. Multiple UEs can receive information in the same subframe through different OVSF codes, and shared packet channels can multiplex users in the time domain. HSDPA is backwards compatible with 3GPP Release 99. Voice and data applications can use the upgraded networks with the same radio channel supporting WCDMA and HSDPA services simultaneously. The HSDPA frame (called subframe) is 2 ms, which is equivalent to 3 WCDMA slots. There are 5 HSDPA subframes in each 10 ms WCDMA frame.

Abbreviations

CQI	Channel Quality Indicator
DPCCH	Dedicated Physical Control Channel
DPCH	Dedicated Physical Channel
DPDCH	Dedicated Physical Data Channel
HARQ	Hybrid Automatic Repeat Request
HSDPA	High Speed Downlink Packet Access
HS-DSCH	High Speed Downlink Shared Channel
HS-PDSCH	High Speed Physical Downlink Shared Channel
HS-SCCH	High Speed Shared Control Channel

In the downlink, a new transport channel (High Speed Downlink Shared Channel, HS-DSCH) and two physical channels (High Speed Physical Downlink Shared Channel, HS-PDSCH and High Speed Shared Control Channel, HS-SCCH) are introduced. HS-PDSCH has a fixed channelization code, with SF=16, from the set of codes reserved for HS-DSCH transmission. Depending on its capabilities, a UE may be assigned multiple HS-PDSCHs in the same subframe. The symbol rate for HS-PDSCH is fixed at 240 ksps with a configurable code number. HS-PDSCH may use QPSK or 16 QAM with 480 kbps or 960 kbps channel bit rate respectively. HS-SCCH has a fixed bit rate of 60 kbps with a configurable code number. There is a maximum of 32 HS-SCCHs per cell (TS 25.433). A BTS can transmit more than 4 HS-SCCHs, but a UE is only required to monitor 4 HS-SCCHs (TS 25.308 5.5.5).

A new uplink physical channel (High Speed Dedicated Physical Control Channel, HS-DPCCH) is also required to provide uplink feedback signaling related to HS-DSCH in the downlink. The feedback consists of HARQ-ACK and CQI (Channel Quality Indicator). HARQ-ACK is carried in the 1st slot of the HS-DPCCH subframe and CQI is carried in the 2nd and 3rd slots of the subframe. Only one HS-PDCCH is allowed in each radio link

and it must exist together with an uplink DPCCH. If the number of $DPDCH_n$ is even, HS-DPCCH goes on the I-branch summation path. If the number of $DPDCH_n$ is odd, HS-DPCCH goes on the Q-branch summation path. To balance the power on I and Q branches, the channelization code of HS-DPCCH is also dependent on the number of $DPDCH_n$. HS-DPCCH output levels are referenced to DPCCH.

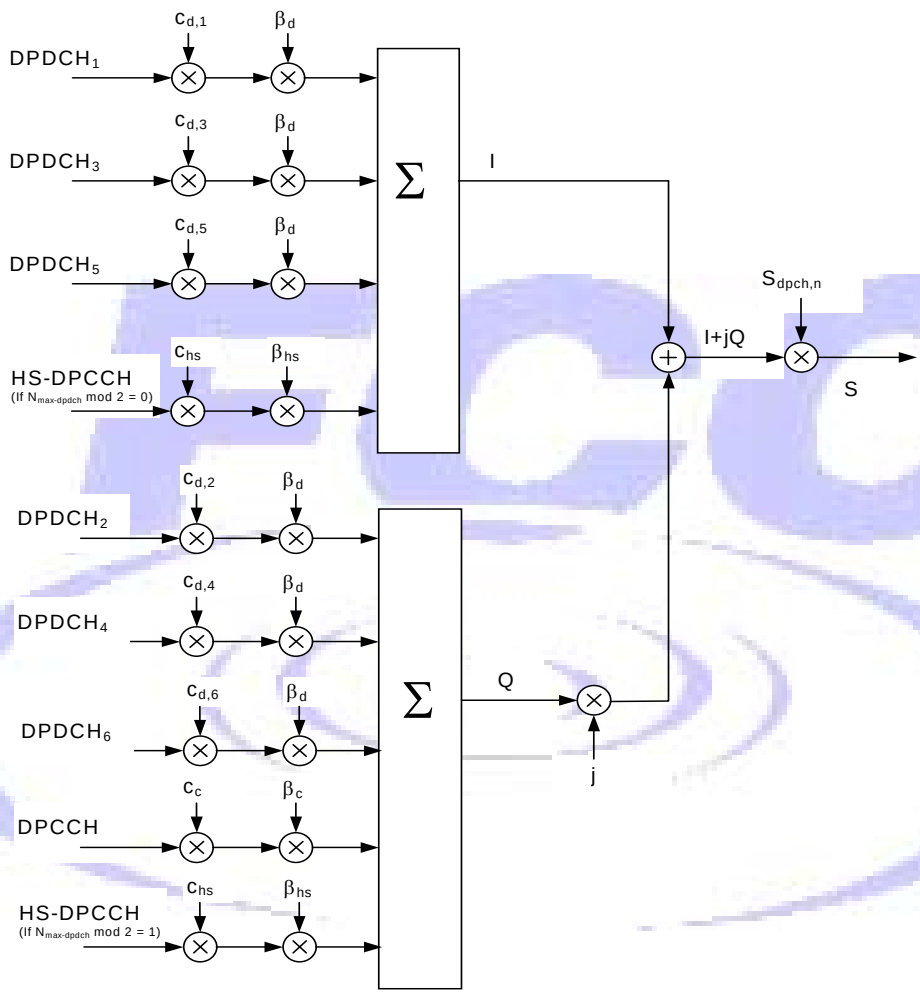

Spreading of Uplink DPCCH, $DPDCH_n$ and HS-DPCCH

HARQ is an implicit link adaptation technique consists of a combination of feed forward error correction (FEC) and ARQ (automatic repeat request) using data from previously failed attempts for future decoding. In AMC (adaptive modulation and coding), explicit C/I measurements are conducted by the UE to set the modulation and coding format. AMC provides coarse data rate selection and HARQ provides fine data rate adjustment according to the channel conditions. Chase Combining (CC) and Incremental Redundancy (IR) may be used in HARQ.

The HSDPA transmission time interval (TTI) is always 2 ms, which is equivalent to 1 subframe. The inter-TTI interval is the number of subframes between transmissions to the UE. All UEs must be capable of receiving transmissions every 3rd subframe and supporting an inter-TTI of 3. More capable UEs may also support inter-TTI of 2 or 1. A UE with minimum inter-TTI interval 3 must be able to support 2 HARQ processes. A UE with minimum inter-TTI interval of 2 must be able to support 3 HARQ processes. A UE with minimum inter-TTI interval of 1 must support 6 HARQ processes. The UE category (HS-DSCH physical layer category) as indicated in the table below defines the physical layer capabilities of the UE. A UE must be capable of receiving 4 parallel HS-SCCHs.

HS-DSCH Category	Maximum HS-DSCH Codes Received	Minimum Inter-TTI Interval	Maximum HS-DSCH Transport Block Bits/HS-DSCH TTI	Total Soft Channel Bits
1	5	3	7298	19200
2	5	3	7298	28800
3	5	2	7298	28800
4	5	2	7298	38400
5	5	1	7298	57600
6	5	1	7298	67200
7	10	1	14411	115200
8	10	1	14411	134400
9	15	1	25251	172800
10	15	1	27952	172800
11	5	2	3630	14400
12	5	1	3630	28800
13	15	1	34800	259200
14	15	1	42196	259200
15	15	1	23370	345600
16	15	1	27952	345600
UE Category 1 to 10 support QPSK and 16QAM only UE Category 11 and 12 support QPSK only UE Category 13 and 14 support QPSK, 16QAM and 64QAM UE Category 15 and 16 support MIMO (TS 25.306-7.3.0 5.1)				

UE Maximum Output Power with HS-DPCCH

For all values of β_{hs} the UE maximum output powers as specified in the Table below are applicable in the case when the HS-DPCCH is fully or partially transmitted during a DPCCH timeslot. In DPCCH time slots where HS-DPCCH is not transmitted the UE maximum output power shall fulfill the requirements specified in Table 6.1 of TS 25.101.

UE maximum output powers with HS-DPCCH (Release 5 Only)

Ratio of β_c to β_d for all values of β_{hs}	Power Class 3		Power Class 4	
	Power (dBm)	Tolerance (dB)	Power (dBm)	Tolerance (dB)
$1/15 \le \beta_c/\beta_d \le 12/15$	+24	+1/-3	+21	+2/-2
$13/15 \le \beta_c/\beta_d \le 15/8$	+23	+2/-3	+20	+3/-2
$15/7 \le \beta_c/\beta_d \le 15/0$	+22	+3/-3	+19	+4/-2

Note: The reference for this requirement is TS 25.101 clause 6.2.2.

HS-DPCCH

The transmission of Ack/Nack or CQI over HS-DPCCH causes the output power to vary in the uplink. A change of transmission power is required when Ack/Nack or CQI is transmitted. The ratio of the amplitude between the DPCCH and the Ack/Nack and CQI respectively is signaled by the higher layers. The power offset between HS-DPCCH and DPCCH in a particular time slot depends on whether Ack, Nack, or CQI is transmitted during the time slot. The sum of power on DPCCH + $DPDCH_n$ shall not change by the transmission of Ack/Nack and CQI unless UE output power would exceed the maximum value specified in the table above when Ack/Nack or CQI is transmitted; whereupon the UE shall apply additional scaling to the total transmit power as defined in section 5.1.2.6 of TS.25.214. The sum of total transmitted power (DPCCH + DPDCH + HS-DPCCH) shall then be rounded to the closest integer dB value. A power step exactly half-way between two integers shall be rounded to the closest integer of greater magnitude. The power change due to transmission of Ack/Nack or CQI is defined as the relative power difference between the mean power of the original (reference) timeslot and the mean power of the target timeslot, not including the transient duration. The transient duration is from 25µs before the HS-DPCCH slot boundary to 25µs after the HS-DPCCH slot boundary.

Channel Gain Factors

Default Gain Factors

HSDPA DL Physical Channel Parameters

Annex E of the conformance test specification in 3GPP TS 34.121 defines the downlink physical channels needed for setting up a connection and for performing transmitter and receiver tests. The specification covers both non-HSDPA and HSDPA test cases. The following table describes example signal level settings for a communication test set.

Downlink Physical Channels for HSDPA Testing of Transmitter Characteristics with HS-DPCCH (TS 34.121, chapter 5.2A, 5.9A, 5.10A and 5.13A with Table E.5.1 and Table E.5.4)		
Physical Channel	**Power relative to Output Channel Power I_{or}**	**Power relative to P-CPICH**
Output Channel Power (I_{or})	Test dependent power <I_{or}>	<I_{or}>
P-CPICH	– 10.0 dB	⇒ <I_{or}> – 10.0 dB
P-CCPCH	– 12.0 dB	– 2.0 dB
SCH	– 12.0 dB (set both SCHs to -15.0 dB)	– 2.0 dB (set both SCHs to -5.0 dB)
PICH	– 15.0 dB	– 5.0 dB
HS-PDSCH	– 3.0 dB	+ 7.0 dB
HS-SCCH_1	– 8.0 dB	+ 2.0 dB
HS-SCCH_2 HS-SCCH_3 HS-SCCH_4	off	off
DPCH	– 9.0 dB	+ 1.0 dB
OCNS ⇒	–16.8 dB	– 6.8 dB

Note: For HS-SCCH_1 and DPCH no specific level values are given in the specification TS 23.121 chapter 9.2.1. The power allocation must be high enough, so that the channels can be detected by the mobile. The OCNS level is used to fill up the output channel power and depends on the settings of HS-SCCH_1 and DPCH.

TS 34.121 E.5

Reference Channels

Two distinct classes of reference measurement channels are defined:

a) **Fixed reference channel** – for this class of reference measurement channel, the per-TTI information bit payload (i.e. the information bit content covered by the 24-bit CRC on the HS-DSCH) is constant and independent of the UE measurement report. This class of reference channel is defined primarily to permit straightforward comparison of initial performance results.

b) **Variable reference channel** – for this class of reference measurement channel, the per-TTI information bit payload is controlled by the most recently received UE measurement report. The mapping between the UE measurement report and the information bit payload is controlled by the Adaptive Modulation Control (AMC) function embedded in the Node-B test emulator.

Fixed Reference Channels (FRC)

The guiding principles for fixed reference channel definition are:

a) **UE capability class** – it is desirable that a UE should be assessed at the limit of its supported information bit rate capability. Accordingly, each UE is assessed

using the highest information rate fixed reference channel that lies within its capability parameters. The defined fixed reference channels permit assessment of the new modulation type of 16-QAM.[44]

b) **Incremental redundancy –** since the new feature of IR (including the sub-category of Chase operation) is defined in the HS-DSCH modulation and coding chain, IR is used as the basis for fixed channel definition, and

c) **HARQ processes** – since the HARQ entity in the UE is required to support multiple HARQ processes (under a semi-static partition defined by higher-layer signaling), the fixed reference channels are defined consistent with multiple HARQ processes in the UE under test, where the number of HARQ processes are consistent with the capability class (specifically, with the inter-TTI distance capability parameter).

Variable Reference Channels

The guiding principles for variable reference channel definition are:

a) **Variable payload** – the per-TTI information bit payload is determined by the AMC function located in the Node-B test emulator. The AMC accepts as input the uplink HS-DPCCH UE measurement report.

b) **Number of HS-PDSCH codes** – the AMC is defined in such a way as to permit a variable number of HS-PDSCH multi-codes to be transmitted, ideally varying from single code transmission at low HS-PDSCH E_c / I_{or} to the maximum number of codes supported by the HS-PDSCH code handling capability parameter of the UE under test.

DL Fixed Reference Channel (FRC) Parameters for HSDPA Tests

β Values for Transmitter Characteristics Tests with HS-DPCCH

Sub-Test	β_c	β_d	β_d *(SF)*	β_c/β_d	β_{HS} (*Note1, Note 2*)	CM (dB) *(Note 3)*	MPR (dB) *(Note 3)*
1	2/15	15/15	64	2/15	4/15	0.0	0.0
2	12/15 *(Note 4)*	15/15 *(Note 4)*	64	12/15 *(Note 4)*	24/15	1.0	0.0
3	15/15	8/15	64	15/8	30/15	1.5	0.5
4	15/15	4/15	64	15/4	30/15	1.5	0.5

Note 1: Δ_{ACK}, Δ_{NACK} and $\Delta_{CQI} = 8 \Leftrightarrow A_{hs} = \beta_{hs}/\beta_c = 30/15 \Leftrightarrow \beta_{hs} = 30/15 * \beta_c$.

Note 2: For the HS-DPCCH power mask requirement test in clause 5.2C, 5.7A, and the Error Vector Magnitude (EVM) with HS-DPCCH test in clause 5.13.1A, and HSDPA EVM with phase discontinuity in clause 5.13.1AA, Δ_{ACK} and $\Delta_{NACK} = 8$ ($A_{hs} = 30/15$) with $\beta_{hs} = 30/15 * \beta_c$, and $\Delta_{CQI} = 7$ ($A_{hs} = 24/15$) with $\beta_{hs} = 24/15 * \beta_c$.

Note 3: CM = 1 for β_c/β_d =12/15, β_{hs}/β_c=24/15. For all other combinations of DPDCH, DPCCH and HS-DPCCH the MPR is based on the relative CM difference. This is applicable for only UEs that support HSDPA in release 6 and later releases.

[44] Currently mandatory for all HSDPA-capable UEs.

Note 4:	For subtest 2 the β_c/β_d ratio of 12/15 for the TFC during the measurement period (TF1, TF0) is achieved by setting the signaled gain factors for the reference TFC (TF1, TF1) to β_c = 11/15 and β_d = 15/15.

Fixed Reference Channel Definition H-Set 1

Parameter	Unit	Value	
Nominal Avg. Inf. Bit Rate	kbps	534	777
Inter-TTI Distance	TTI's	3	3
Number of HARQ Processes	Processes	2	2
Information Bit Payload (N_{INF})	Bits	3202	4664
Number Code Blocks	Blocks	1	1
Binary Channel Bits Per TTI	Bits	4800	7680
Total Available SML's in UE	SML's	19200	19200
Number of SML's per HARQ Proc.	SML's	9600	9600
Coding Rate		0.67	0.61
Number of Physical Channel Codes	Codes	5	4
Modulation		QPSK	16QAM
Note: The HS-DSCH shall be transmitted continuously with constant power but only every third TTI shall be allocated to the UE under test.			

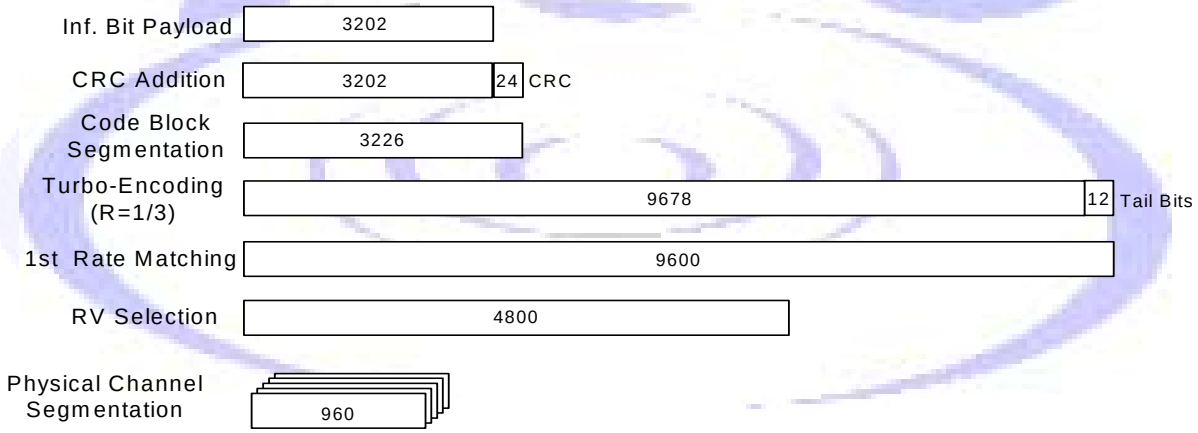

Coding rate for Fixed reference Channel H-Set 1 (QPSK)

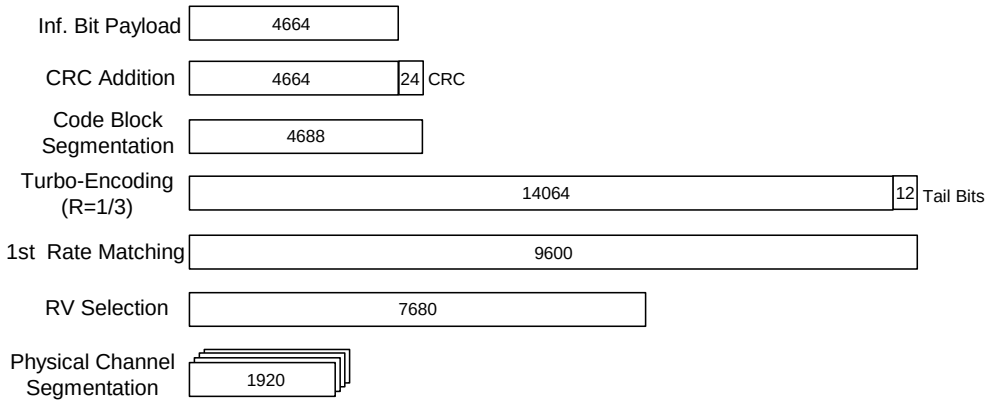

Coding rate for Fixed reference Channel H-Set 1 (16 QAM)

Fixed Reference Channel Definition H-Set 2

Parameter	Unit	Value	
Nominal Avg. Inf. Bit Rate	kbps	801	1166
Inter-TTI Distance	TTI's	2	2
Number of HARQ Processes	Processes	3	3
Information Bit Payload (N_{INF})	Bits	3202	4664
Number Code Blocks	Blocks	1	1
Binary Channel Bits Per TTI	Bits	4800	7680
Total Available SML's in UE	SML's	28800	28800
Number of SML's per HARQ Proc.	SML's	9600	9600
Coding Rate		0.67	0.61
Number of Physical Channel Codes	Codes	5	4
Modulation		QPSK	16QAM
Note: The HS-DSCH shall be transmitted continuously with constant power but only every second TTI shall be allocated to the UE under test.			

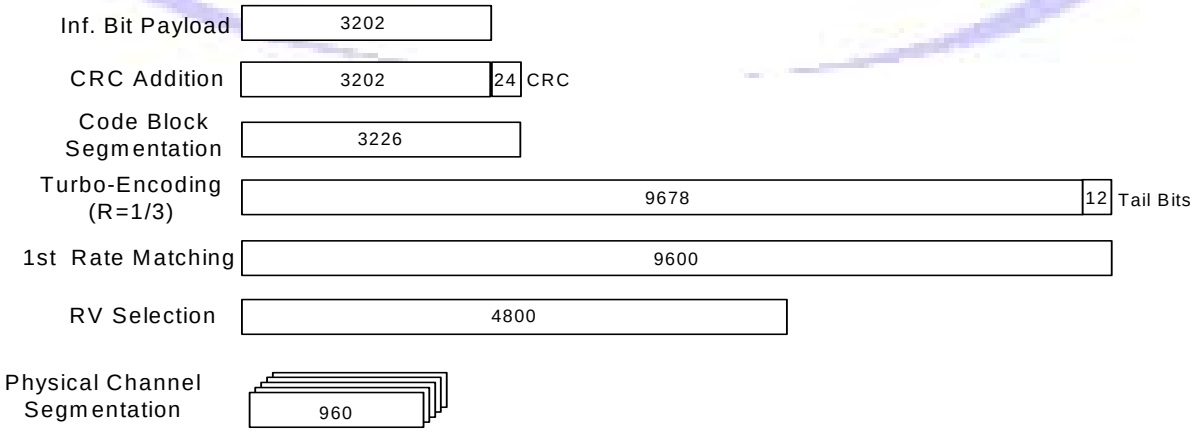

Coding rate for Fixed Reference Channel H-Set 2 (QPSK)

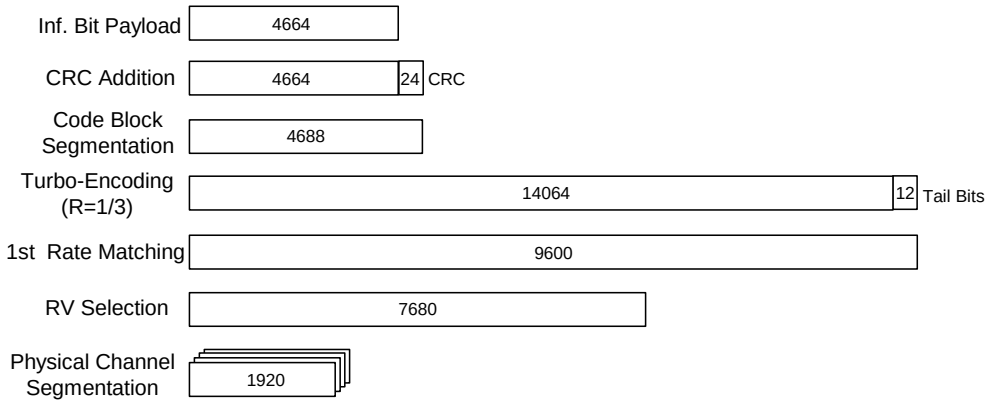

Coding rate for Fixed Reference Channel H-Set 2 (16QAM)

Fixed Reference Channel Definition H-Set 3

Parameter	Unit	Value	
Nominal Avg. Inf. Bit Rate	kbps	1601	2332
Inter-TTI Distance	TTI's	1	1
Number of HARQ Processes	Processes	6	6
Information Bit Payload (N_{INF})	Bits	3202	4664
Number Code Blocks	Blocks	1	1
Binary Channel Bits Per TTI	Bits	4800	7680
Total Available SML's,in UE	SML's	57600	57600
Number of SML's per HARQ Proc.	SML's	9600	9600
Coding Rate		0.67	0.61
Number of Physical Channel Codes	Codes	5	4
Modulation		QPSK	16QAM

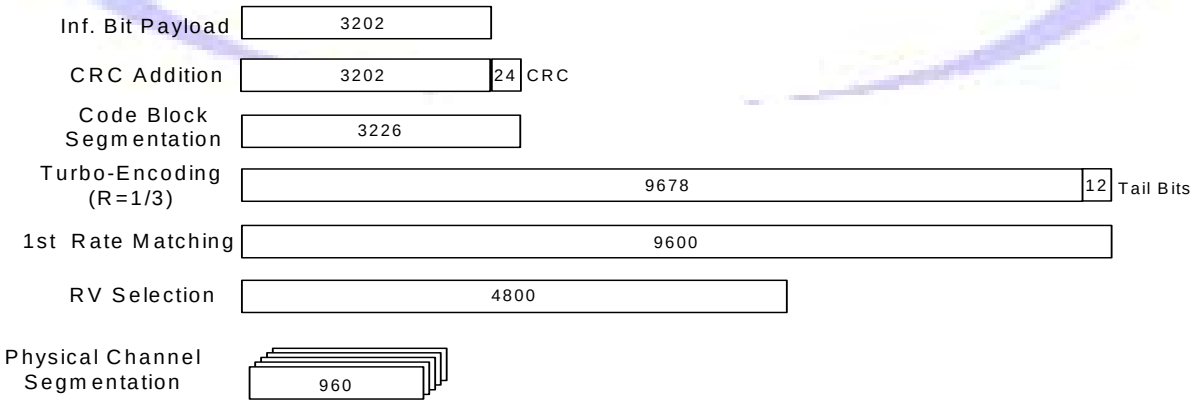

Coding rate for Fixed reference Channel H-Set 3 (QPSK)

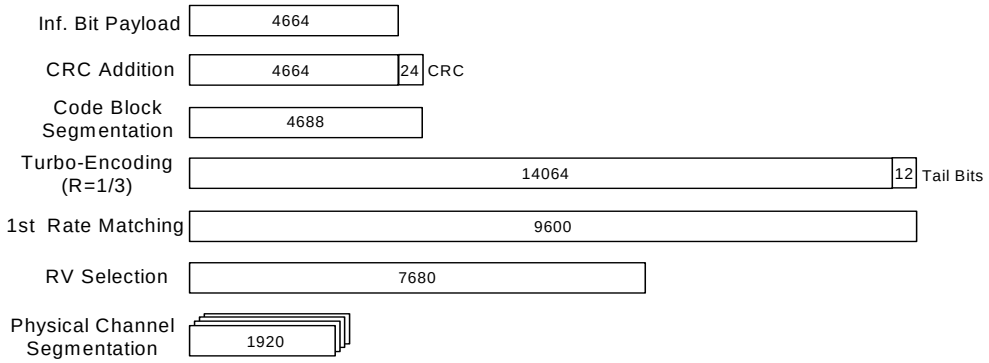

Coding rate for Fixed reference Channel H-Set 3 (16QAM)

Fixed Reference Channel Definition H-Set 4

Parameter	Unit	Value
Nominal Avg. Inf. Bit Rate	kbps	534
Inter-TTI Distance	TTI's	2
Number of HARQ Processes	Processes	2
Information Bit Payload (N_{INF})	Bits	3202
Number Code Blocks	Blocks	1
Binary Channel Bits Per TTI	Bits	4800
Total Available SML's in UE	SML's	14400
Number of SML's per HARQ Proc.	SML's	7200
Coding Rate		0.67
Number of Physical Channel Codes	Codes	5
Modulation		QPSK
Note: This test case verifies the minimum inter-TTI distance and therefore HS-PDSCH transmission shall be as follows: …00X0X000X0X…, where 'X' marks TTI in which HS-PDSCH is allocated to the UE and '0' marks TTI, in which HS-PDSCH is not allocated to the UE. The HS-DSCH shall be transmitted continuously with constant power.		

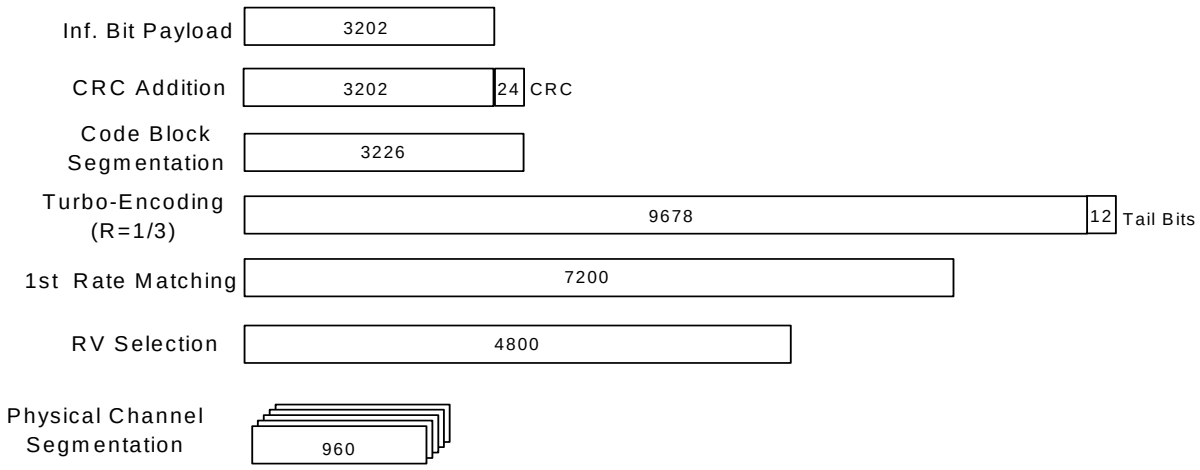

Coding rate for Fixed Reference Channel H-Set 4

Fixed Reference Channel Definition H-Set 5

Parameter	Unit	Value
Nominal Avg. Inf. Bit Rate	kbps	801
Inter-TTI Distance	TTI's	1
Number of HARQ Processes	Processes	3
Information Bit Payload (N_{INF})	Bits	3202
Number Code Blocks	Blocks	1
Binary Channel Bits Per TTI	Bits	4800
Total Available SML's in UE	SML's	28800
Number of SML's per HARQ Proc.	SML's	9600
Coding Rate		0.67
Number of Physical Channel Codes	Codes	5
Modulation		QPSK
Note: This test case verifies the minimum inter-TTI distance and therefore HS-PDSCH transmission shall be as follows: …00XXX000XXX…, where 'X' marks TTI in which HS-PDSCH is allocated to the UE and '0' marks TTI, in which HS-PDSCH is not allocated to the UE. The HS-DSCH shall be transmitted continuously with constant power.		

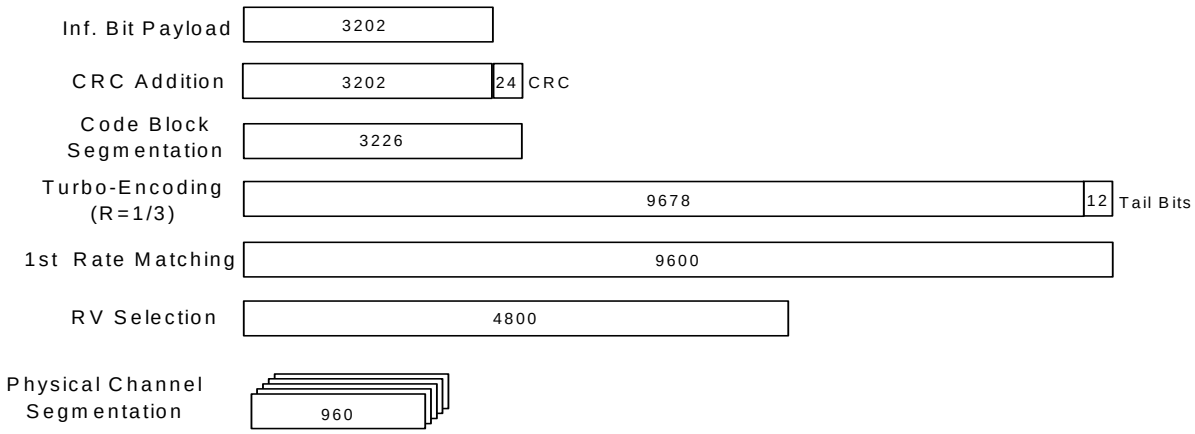

Coding rate for Fixed Reference Channel H-Set 5

Fixed Reference Channel Definition H-Set 6

Parameter	Unit	Value	
Nominal Avg. Inf. Bit Rate	kbps	3219	4689
Inter-TTI Distance	TTI's	1	1
Number of HARQ Processes	Processes	6	6
Information Bit Payload (N_{INF})	Bits	6438	9377
Number Code Blocks	Blocks	2	2
Binary Channel Bits Per TTI	Bits	9600	15360
Total Available SML's in UE	SML's	115200	115200
Number of SML's per HARQ Proc.	SML's	19200	19200
Coding Rate		0.67	0.61
Number of Physical Channel Codes	Codes	10	8
Modulation		QPSK	16QAM

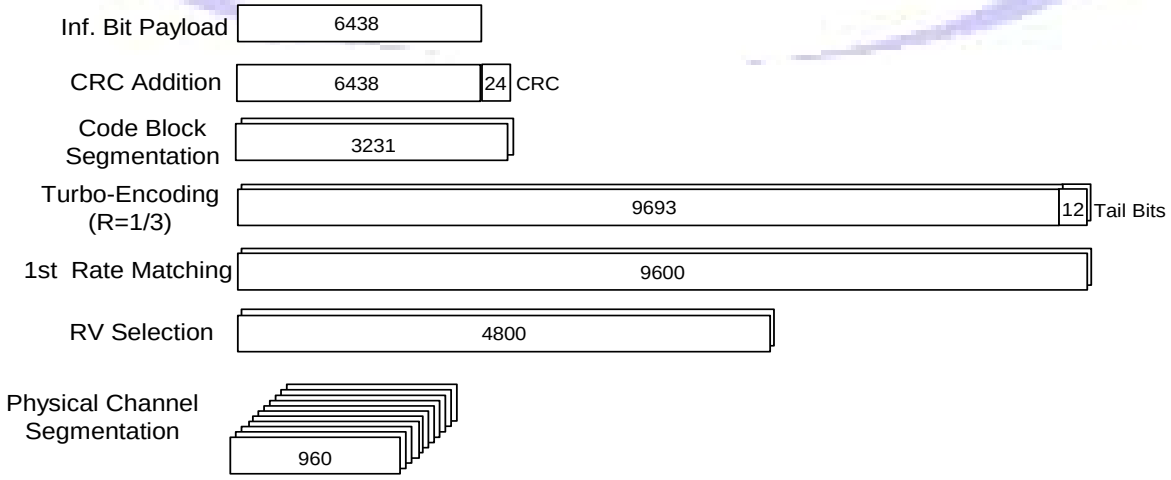

Coding rate for Fixed reference Channel H-Set 6 (QPSK)

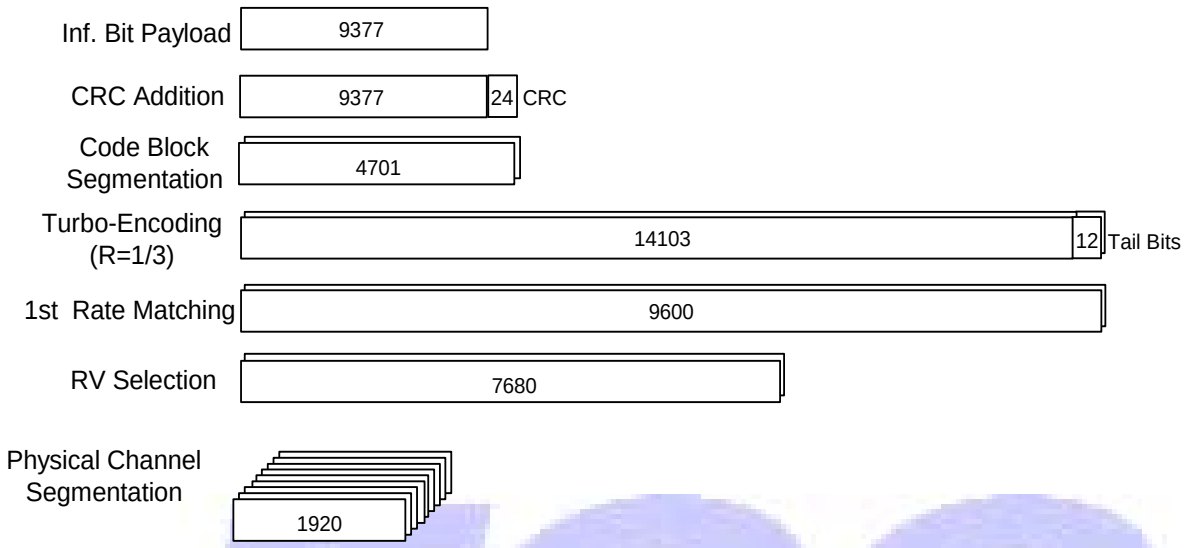

Coding rate for Fixed reference Channel H-Set 6 (16 QAM)

Mapping Between HS-DSCH Category and FRC

The performance requirements of a particular UE belonging to certain HS-DSCH category are determined according to the Table below.

HS-DSCH category	Corresponding requirement
Category 1	H-Set 1
Category 2	H-Set 1
Category 3	H-Set 2
Category 4	H-Set 2
Category 5	H-Set 3
Category 6	H-Set 3
Category 7	H-Set 6 (Rel-6)
Category 8	H-Set 6 (Rel-6)
Category 11	H-Set 4
Category 12	H-Set 5

Test Parameters for Testing FRCs H-Set 1/ 2/ 3/ 4/ 5

Parameter	
Phase reference	P-CPICH (dBm/3.84 MHz)
I_{oc}	-60
Redundancy and constellation version coding sequence	QPSK: {0,2,5,6}; 16 QAM: {6,2,1,5)
Maximum number of HARQ transmission	4

During the Fixed Reference Channel (FRC) tests the behavior of the Node-B emulator in response to the ACK/NACK signaling field of the HS-DPCCH is specified in the Table below.

HS-DPCCH ACK/NACK	Node-B Emulator Behavior
ACK	ACK: new transmission using 1st redundancy version (RV)
NACK	NACK: retransmission using the next RV (up to the maximum permitted number or RV's)
DTX	DTX: retransmission using the RV previously transmitted to the same HARQ process

Mapping of CQI Values for UE Categories

CQI & UE Category Mapping

HSDPA Summary Notes

- HSDPA is a packet-based data service operating inside a WCDMA DL with transmission rates up to 8-10 Mbps (20 Mbps for MIMO) over a 5 MHz BW in WCDMA downlink
- HSDPA changes – physical & transport layers
  - HSDPA cooperates with existing WCDMA transport channels to support sharing physical resources between multiple services
  - HSDPA also cooperates with WCDMA DL physical channels
- Release 99 frozen in 2000, HSDPA frozen in Release 5 in June 2002
- HSDPA UE & Release 99 UE can share same carrier
- the same radio channels can support WCDMA & HSDPA services simultaneously
- fast power control in WCDMA is replaced by shorter frames, fixed SF and HARQ/CQI
- HSDPA uses 2 ms / 3 slot, 7680 chips, subframes; i.e. 5 subframes per WCDMA frame (10 ms)
- HSDPA physical channels – DL: HS-PDSCH & HS-SCCH; UL: HS-DPCCH
  - **HS-PDSCH** – high speed physical downlink shared channel,
  - **HS-SCCH** – high speed shared control channel
  - **HS-DPCCH** – high speed dedicated physical control channel)
- HSDPA transport channel – DL: **HS-DSCH** (high speed downlink shared channel)
- compared to WCDMA dedicated channels, shared packet channels can multiplex multiple users in time domain (TDM)
- information routing between regular and High Speed mode connections
  - when UE is in idle mode (not High Speed mode) BTS sends dedicated signaling info from DCCH logical channel through FACH transport channel, which maps the info onto S-CCPCH physical channel for transmission to UE
  - When UE is in dedicated High Speed connection mode, the same signaling info is routed through the HS-DSCH transport channel and mapped onto the HS-DPCCH physical channel for transmission to UE
- HSDPA requires Test Model 5 for testing of BTS

HS-PDSCH – downlink physical channel (shared data)

- corresponds to one channelization code of fixed spreading factor SF = 16 from the set of channelization codes reserved for HS-DSCH transmission
- multi-code transmission translates to UE being assigned multiple channelization codes in the same HS-PDSCH subframe, depending on UE capability
- fixed symbol rate – 240 ksps
- either QPSK or 16-QAM
  - QPSK: 240 ksps / 480 kbps
  - 16-QAM: 240 ksps / 960 kbps
- fixed 1/3 turbo coder
- multiple HS-PDSCH in each subframe is allowed
- up to 15 HS-PDSCH (SF = 16); one or more code channel must be reserved for WCDMA pilot, paging etc

HS-SCCH – downlink physical channel (shared control)

- fixed 60 kbps with configurable code numbers; QPSK, 30 ksps, SF = 128
- BTS transmits up to 32 HS-SCCH channels per cell

- UE is required to monitor up to 4 HS-SCCH channels
- HS-SCCH subframes are transmitted 2 slots before HS-PDSCH subframes; i.e. UE must process control data in HS-SCCH immediately before HS-PDSCH is received

HS-DPCCH – uplink high speed dedicated physical control channel (UE feedback control – HARQ / CQI)

- HS-DPCCH provides feedback for downlink HS-DSCH to the BTS
- HS-DPCCH must exist with DPCCH (UE uplink WCDMA control channel)
- HS- DPCCH also uses 3 slots, 2 ms, subframes; 15 kbps, 15 ksps, SF = 256
  - 1st slot contains HARQ-ACK (hybrid automatic repeat request)
  - 2nd & 3rd slots contain CQI (channel quality indicator)
    - CQI value range – 0 – 30 for next DL transmission; 0 = out of range
    - UE reports maximum possible CQI value
- no multiple HS-DPCCH allowed
- without continuous CQI data, a burst HS-DPCCH signal is expected (CQI interval: 2 ms - ∞)
- for even number of WCDMA DPDCH channels, HS-DPCCH is summed in the I-channel
  - C_{256}^{1} for 2, 4 & 6 DPDCH
- for odd number of WCDMA DPDCH channels, HS-DPCCH is summed in the Q-channel
  - C_{256}^{64} for one DPDCH and C_{256}^{32} for 3 & 5 DPDCH
- HS-DPCCH channel code varies, depending on DPDCH activities
- HS-DPCCH can add up to about 1.5 dB to the peak to average power ratio; UE maximum output power specifications has been relaxed (25.101, 6.2.2) to account for differences in HSDPA peak to average power ratio
  - Besides adding uplink code channel, transmission on HS-DPCCH is discontinuous and not time aligned with other WCDMA uplink channels; therefore, putting additional stress on power amplifiers
  - DTX can occur on ACK/NACK and CQI fields independently
    - ACK/NACK transmitted in response to HS-PDSCH transmission
    - CQI transmitted according to CQI feedback cycle, configured by higher layers (0 – 160 ms)

$DPDCH_n$	HS-DPCCH Code	I / Q channel
1	C_{256}^{64}	Q
2, 4, 6	C_{256}^{1}	I
3, 5	C_{256}^{32}	Q

(above may imply simultaneous voice and high speed data is possible using HS-DPCCH & DPDCH for HSDPA & WCDMA)

AMC – adaptive modulation and coding

- modulation and code rate are proportional to channel condition, distance between UE and BTS
- power held constant over subframe interval
- modulation, coding and number of HS-PDSCH channels are changed to match channel condition in every subframe
- UE reports channel conditions to BTS through uplink CQI fields in HS-DPCCH for next DL transmission

- the nominal data rate (data rate within a subframe) is defined by the transport block size
- the transport block size, modulation scheme, number of HS-PDSCH channels determine the effective code rate
- higher effective code rate means less coding redundancy, less reception error margin and higher modulation schemes also have less error margin; therefore, intended for desirable channel conditions

ARQ – automatic repeat request
HARQ – hybrid ARQ: combination of feed forward error correction (FEC) and ARQ
Soft Combining is used to reduce repeated requests
- **CC** – Chase Combining: same version of bits sent in retransmission
- **IR** – different set of bits sent in retransmission

Inter-TTI – inter transmission time interval
- an inter-TTI = 2 ms
- inter-TTI interval refers the number of TTIs or subframes between transmissions to the same UE
- UE must be able to receive at least every 3rd subframes, i.e. inter-TTI = 3
- there are 12 UE categories
  - 11 & 12 use QPSK only
  - maximum HS-DSCH channels of 5, 10 or 15 allowed
  - inter-TTI of 1, 2, or 3 allowed
  - maximum bits of HS-DSCH transport block in TTI and total soft channel bits vary with UE category
    - UE with minimum inter-TTI = 3 must support 2 HARQ processes
    - UE with minimum inter-TTI = 2 must support 3 HARQ processes
    - UE with minimum inter-TTI = 1 must support 6 HARQ processes

FRC – Fixed Reference Channels (similar to RMC) are used to test BTS & UE in HSDPA
- 6 FRC-H Sets are defined in Release 6 (5 in Release 5) to test different UE categories
- AMC is not applied in FRC; because CQI reports are not important and disregarded

EUDCH – enhanced uplink dedicated channel, also called **HSUPA** – high speed uplink packet access
- targeted for Release 6 to increase uplink UE date rates (projected time frame, 2008)
- support of multi-media
- video conferencing

MIMO – targeted for Release 7

APPENDIX E: Release 6 HSPA (HSUPA/HSDPA) Transmitter Configuration Info

HSUPA is referred to as the Enhanced Dedicated Channel (E-DCH) in 3GPP Release 6 specifications. The objectives are to improve uplink performance by increasing network capacity, throughput and reduce delay. The Enhanced Uplink (EU) features are compatible with Release 99, Release 4 and Release 5 UEs. Voice and data applications can use the upgraded networks with the same radio channels supporting WCDMA, HSDPA and HSUPA services simultaneously. However, different test configurations apply to Release 6 devices (WCDMA/HSUPA/HSDPA) due to Cubic Metric (CU), Maximum Power Reduction (MPR) and other implementation requirements.[45] Significant improvements in overall system performance can be achieved when HSUPA is operated together with HSDPA. It is possible to deploy HSUPA without any dependency on HSDPA deployment; however, a terminal supporting HSUPA must support HSDPA. The use of HSDPA and HSUPA can affect each other, but the impacts are generally insignificant.

E-DCH is a transport channel. Two new uplink physical channels are introduced in HSUPA, E-DCH Dedicated Physical Data Channel (E-DPDCH) and E-DCH Dedicated Physical Control Channel (E-DPCCH), to carry the data from E-DCH. The control information associated with E-DPDCH is carried on E-DPCCH. Both E-DPCCH and HS-DPCCH power levels are set relative to DPCCH. Three new downlink channels are also introduced for control purposes: E-DCH Absolute Grant Channel (E-AGCH), E-DCH Relative Grant Channel (E-RGCH) and the E-DCH Hybrid ARQ Indicator Channel (E-HICH). These new downlink channels enable efficient management of cell resources to increase network capacity by frequently modifying the power used by UEs in a cell. A UE may transmit up to 4 E-DPDCHs with spreading factor (SF) down to 2; but reduction in coding protection is necessary to increase throughput. A smaller transmission time interval (TTI) of 2 ms may be used to accelerate packet scheduling, together with HARQ and scheduling mechanisms, to allow quick data rate changes and reduced delays. Both 2 and 10 ms subframes are supported in HSUPA. This is equivalent to 3 or 15 WCDMA slots and is configured at call setup. Unlike HSDPA, however, 2 ms TTI is not a mandatory capability for all UE categories.

The maximum power of a UE and the E-DPDCHs in each TTI are controlled by E-AGCH and E-RGCH, which directly affect the possible data rate used in each TTI. Absolute Grants define the absolute maximum UL resources a UE may use. It identifies the maximum E-DCH traffic to pilot ratio (E-DPDCH / DPCCH) allowed for a UE in the next transmission. The Absolute Grant Scope identifies if the Grant is for "PER HARQ" process or "ALL HARQ" processes. E-AGCH is only transmitted from the serving cell. E-RGCH and E-HICH are transmitted from radio links that are part of the serving radio

[45] Procedures for earlier releases (99 & 5 etc.) may not be appropriate for testing Release 6 devices.

link set (RLS) and also from non-serving radio links. Different Relative Grants may be received from both serving and non-serving RLS but only serving RLS can increase resource limitations. Relative Grants from non-serving RLS may only decrease or hold previously set E-DPDCH power and resource limitations. These grant mechanisms enable different UEs to transmit at different data rates using different relative power between E-DPDCHs and DPCCH while allowing a Node B to balance the DPCCH power received from UEs in the cell.

E-DPCCH includes a Happy Bit to indicate if a UE is satisfied with its current Serving Grant (SG). ACK and NACK are carried by E-HICH from the Node B to each UE; similar to that used by HS-DPCCH in HSDPA; however, CQI is not used in HSUPA. Since separate ACK/NACK from each cell inside the UE active set is carried on E-HICH; therefore, an ACK from any cell is consider acceptable by the UE. Retransmission in the uplink is synchronous. Each data block may be retransmitted for a maximum number of times. Up to 4 HARQ processes are allowed for 10 ms TTI and 8 processes for 2 ms TTI. The highest data rate may be achieved when DPDCH is not used where F-DPCH (Fractional Dedicated Physical Channel) is used to carry the TPC bits for UE power control.

Definitions

Serving E-DCH cell: The cell a UE receives Absolute Grants through the Node-B scheduler. A UE has one Serving E-DCH cell.

Serving E-DCH RLS or Serving RLS: Set of cells that contain at least the Serving E-DCH cell and from which the UE can receive and combine one Relative Grant. The UE has only one Serving E-DCH RLS.

Non-serving E-DCH RLS or Non-serving RLS: Set of cells which does not contain the Serving E-DCH cell and from which the UE can receive and combine one Relative Grant. The UE can have zero, one or several Non-serving E-DCH RLS.

Abbreviations

CQI	Channel Quality Indicator
DPCCH	Dedicated Physical Control Channel
DPCH	Dedicated Physical Channel
DPDCH	Dedicated Physical Data Channel
E-AGCH	E-DCH Absolute Grant Channel
E-DCH	Enhanced Dedicated Channel
E-HICH	E-DCH HARQ ACK Indicator Channel
E-RGCH	E-DCH Relative Grant Channel
E-RNTI	E-DCH Radio Network Temporary Identifier
E-TFCI	E-DCH Transport Format Combination Indicator
F-DPCH	Fractional Dedicated Physical Channel
HARQ	Hybrid Automatic Repeat Request
HSDPA	High Speed Downlink Packet Access
HS-DSCH	High Speed Downlink Shared Channel

HS-PDSCH	High Speed Physical Downlink Shared Channel
HS-SCCH	High Speed Shared Control Channel
RG	Relative Grant
RLS	Radio Link Set
RSN	Retransmission Sequence Number
RV	Redundancy Version
SG	Serving Grant
TSN	Transmission Sequence Number

Transport Channels

E-DCH is a transport channel that carries one block of data per TTI from the UE to Node B. E-DCH and DCH use separate CCTrCHs. There is only one E-DCH per CCTrCh of type E-DCH per UE. Both 2 ms TTI and 10 ms TTI are supported by E-DCH. The support of 10 ms TTI is mandatory for all UEs. The support of 2 ms TTI is only mandatory for certain UE categories. Switching between TTI is controlled by the UTRAN.

For all UE categories, uplink DCH capability is limited to 64kbps when E-DCH is configured for the radio link. The UE determines the maximum block size it can carry according to allowed transmit power, which also determines the possible spreading factors and number of physical channels. ACK or NACK is sent by the Node B to indicate successful or unsuccessful reception of each data block.

Dedicated Physical Channels

The maximum combinations of simultaneously configured dedicated physical channels for a UE, in addition to DPCCH, are specified in Table 1. Up to 4 E-DPDCHs may be configured to carry data from E-DCH, but the maximum number of channels could be lower due to actual UE capabilities. The standard DPCCH is always transmitted at the same time as E-DPDCH and E-DPCCH. DPDCH and HS-DPCCH may also be transmitted when HSUPA is operating simultaneously along with WCDMA speech and HSDPA. E-DPCCH power is set relative to the power on DPCCH. Control information for E-DPDCH is carried on E-DPCCH, including E-TFCI (Enhanced Transport Format Combination Information) and RSN (Retransmission Sequence Number) for the Node B to decode E-DPDCH and redundancy version of each HARQ transmission. The channel configurations are illustrated in Figure 1.

Table 1: Maximum Number of Simultaneously Configured Uplink Dedicated Channels

Configuration	DPDCH	HS-DPCCH	E-DPDCH	E-DPCCH
R99 + HSDPA (R5)	6	1	-	-
R99 + HSDPA + HSUPA	1	1	2	1
HSPDA + HSUPA	-	1	4	1

Figure 1 Channel Configurations

Spreading of the uplink dedicated physical channels - DPCCH, DPDCHs, HS-DPCCH, E-DPCCH and E-DPDCHs is illustrated in Figure 2. The resulting complex-valued streams are summed into a single complex-valued stream and scrambled by the complex-valued scrambling code.

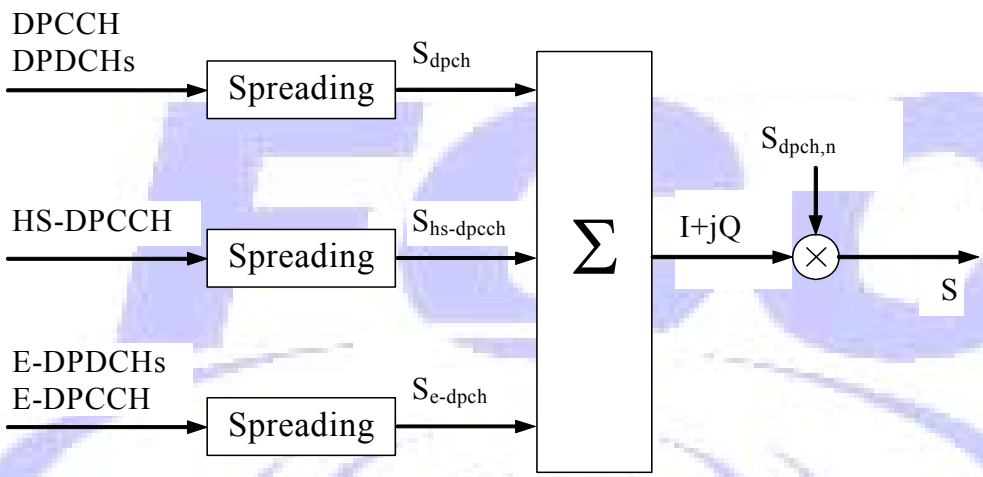

Figure 2: Spreading for Uplink Dedicated Channels

E-DPCCH and E-DPDCH

E-DPDCH carries data from the E-DCH transport channel. There may be zero, one, two or four E-DPDCHs on each radio link. BPSK is the modulation for E-DPDCH. E-DPCCH contains the control information associated with E-DCH and is transmitted on channelization code 1 and spreading factor (SF) 256, also using BPSK. There is at most one E-DPCCH on each radio link. E-DPCCH consists of 10 bits: E-DCH Transport Format Combination Indicator (E-TFCI, 7 bits), Retransmission Sequence Number for HARQ (RSN, 2 bits) and a "Happy Bit" for scheduling feedback from the UE. E-DPDCH and E-DPCCH are always transmitted simultaneously, except when E-DPDCH but not E-DPCCH is DTXed due to power scaling. The spreading operation of E-DPDCHs and E-DPCCH is illustrated in Figure 3. E-DPCCH is always transmitted with DPCCH in the same slot. The frame structure for E-DPDCH and E-DPCCH is shown in Figure 4. Each radio frame is divided into 5 subframes of 2 ms each. The first subframe starts at the beginning of each radio frame and the 5th subframe ends at the end of each radio frame. The SF is determined by the slot format and number of bits per slot. E-DPDCH slot formats, together with the corresponding bit rates and number of bits are specified in Table 2. E-DPCCH slot format is listed in Table 3. E-DPDCH can use

spreading factors 2 and up to 256; however, a minimum spreading factor of 2 is not supported by all UE categories. Multi-code transmission using 2 channelization codes of SF 2, 2 channelization codes of SF 4, or a combination of the two are possible. E-DPDCH is time aligned with DPCCH. Turbo coding at 1/3 code rate is used for E-DPDCH channel coding. The possible maximum uplink channel combinations are shown in Table 1.

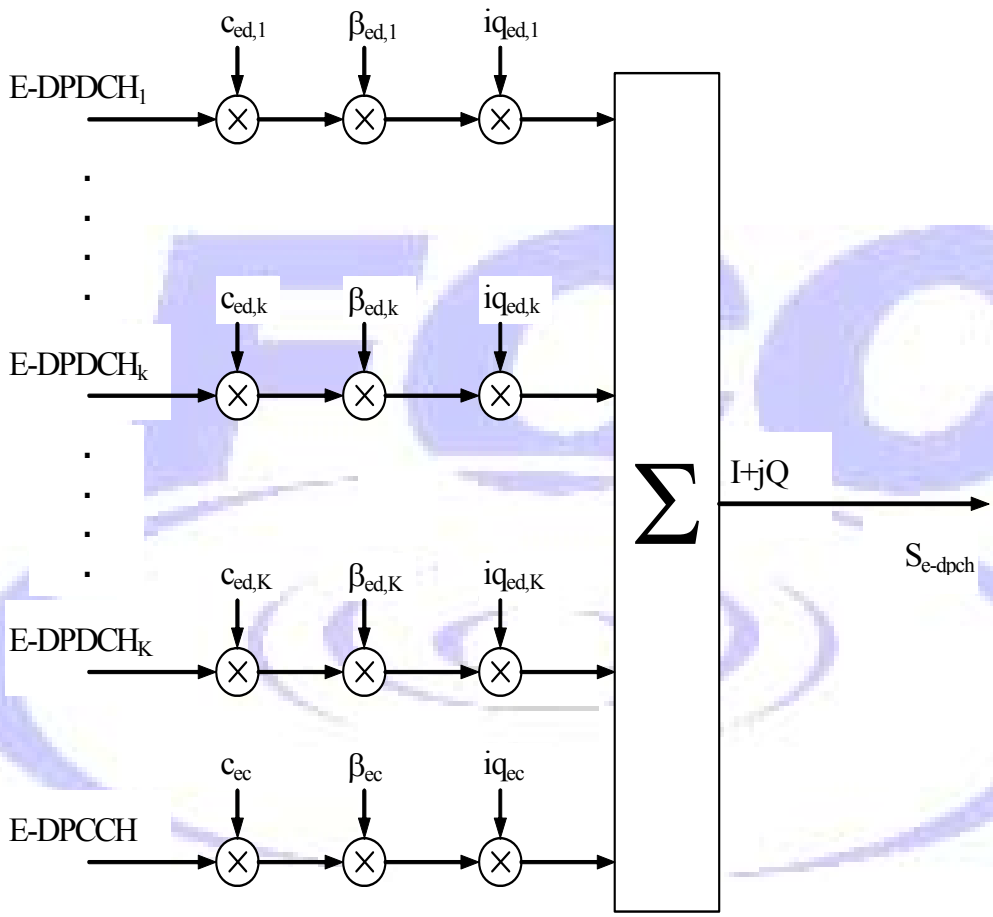

Figure 3: Spreading for E-DPDCH/E-DPCCH

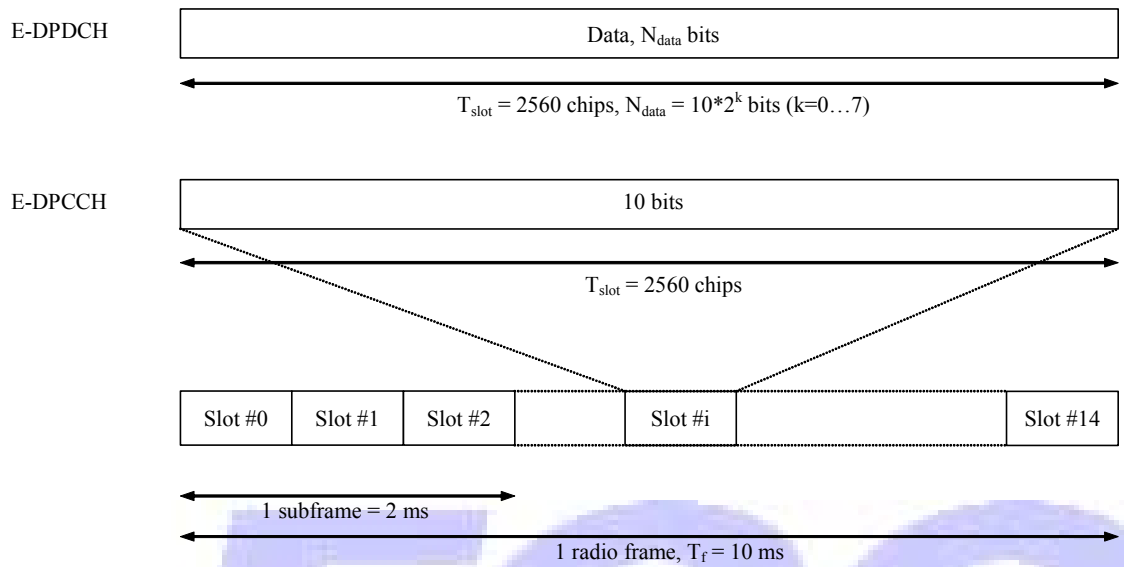

Figure 4: E-DPDCH Frame Structure

Table 2: E-DPDCH Slot Formats

Slot Format #i	Channel Bit Rate (kbps)	SF	Bits/ Frame	Bits/ Subframe	Bits/Slot N_{data}
0	15	256	150	30	10
1	30	128	300	60	20
2	60	64	600	120	40
3	120	32	1200	240	80
4	240	16	2400	480	160
5	480	8	4800	960	320
6	960	4	9600	1920	640
7	1920	2	19200	3840	1280

Table 3: E-DPCCH Slot Formats

Slot Format #i	Channel Bit Rate (kbps)	SF	Bits/ Frame	Bits/ Subframe	Bits/Slot N_{data}
0	15	256	150	30	10

There can be one or more E-DPDCHs. Each is scaled with its own gain factor, which may vary on radio frame basis or sub-frame basis depending on whether the E-DCH TTI is 10 or 2 ms. The gain factor settings are independent of the inner loop power control. As shown in Figure 3, E-DPCCH and E-DPDCH$_k$ are spread to the chip rate by channelization code c_{ec} and $c_{ed,k}$, respectively; where $c_{ec} = C_{ch,256,1}$ and $c_{ed,k}$ is dependent on the number of E-DPDCHs as shown in Table 4 and Figure 1.

Table 4: Channelization Code for E-DPDCH

$N_{max\text{-}dpdch}$	E-DPDCH$_k$	Channelization code $C_{ed,k}$
0	E-DPDCH$_1$	$C_{ch,SF,SF/4}$ if SF ≥ 4 $C_{ch,2,1}$ if SF = 2
	E-DPDCH$_2$	$C_{ch,4,1}$ if SF = 4 $C_{ch,2,1}$ if SF = 2
	E-DPDCH$_3$ E-DPDCH$_4$	$C_{ch,4,1}$
1	E-DPDCH$_1$	$C_{ch,SF,SF/2}$
	E-DPDCH$_2$	$C_{ch,4,2}$ if SF = 4 $C_{ch,2,1}$ if SF = 2

NOTE: When more than one E-DPDCH is transmitted, the respective channelization codes used for E-DPDCH$_1$ and E-DPDCH$_2$ are always the same.

After channelization the spread signals are weighted by the corresponding gain factor β_{ec} and $\beta_{ed,k}$. The value of β_{ec} is based on the quantized amplitude ratio $A_{ec} = \beta_{ec}/\beta_c$ in Table 5. The values of $\beta_{ed,k}$ are computed according to the reference gain factors, spreading factors for the E-DPDCH$_k$, transport format combination of E-DCH (E-TFC), HARQ profile/offsets for the data carried in the TTI and quantization ratio $A_{ed} = \beta_{ed}/\beta_c$ as shown in Table 6. A_{ec} and A_{ed} are translated from $\Delta_{E\text{-}DPCCH}$ and $\Delta_{E\text{-}DPDCH}$ according to signals from higher layers. The HARQ offsets used for different HARQ profiles are also configured by higher layers as specified by Δ_{harq} in Table 7.

Table 5: Quantization for $\Delta_{E\text{-}DPCCH}$

Signaled values for $\Delta_{E\text{-}DPCCH}$	Quantized amplitude ratios $A_{ec} = \beta_{ec}/\beta_c$
8	30/15
7	24/15
6	19/15
5	15/15
4	12/15
3	9/15
2	8/15
1	6/15
0	5/15

Table 6: Quantization for $\Delta_{E\text{-}DPDCH}$

Signaled values for $\Delta_{E\text{-}DPDCH}$	Quantized amplitude ratios $A_{ed} = \beta_{ed,k}/\beta_c$
29	168/15
28	150/15
27	134/15
26	119/15
25	106/15
24	95/15

Signaled values for $\Delta_{E\text{-}DPDCH}$	Quantized amplitude ratios $A_{ed} = \beta_{ed,k}/\beta_c$
23	84/15
22	75/15
21	67/15
20	60/15
19	53/15
18	47/15
17	42/15
16	38/15
15	34/15
14	30/15
13	27/15
12	24/15
11	21/15
10	19/15
9	17/15
8	15/15
7	13/15
6	12/15
5	11/15
4	9/15
3	8/15
2	7/15
1	6/15
0	5/15

Table 7: HARQ Offset Δ_{harq}

Signaled values for Δ_{harq}	Power offset values Δ_{harq} [dB]
6	6
5	5
4	4
3	3
2	2
1	1
0	0

After weighted by the corresponding gain factors the signals are mapped to the I or Q branch and summed together according to the value of iq_{ec} for E-DPCCH and $iq_{ed,k}$ for each E-DPDCH$_k$ as shown in Table 8. E-DPCCH is always mapped to the I branch, i.e. $iq_{ec} = 1$. IQ branch mapping for E-DPDCH$_k$ is dependent on $N_{max\text{-}dpdch}$ (see Table 8, also illustrated in Figure 1) and whether HS-DSCH is configured for the UE.

Table 8: IQ Branch Mapping for E-DPDCH

$N_{max\text{-}dpdch}$	HS-DSCH configured	$E\text{-}DPDCH_k$	$iq_{ed,k}$
0	No/Yes	$E\text{-}DPDCH_1$	1
		$E\text{-}DPDCH_2$	j
		$E\text{-}DPDCH_3$	1
		$E\text{-}DPDCH_4$	j
1	No	$E\text{-}DPDCH_1$	j
		$E\text{-}DPDCH_2$	1
1	Yes	$E\text{-}DPDCH_1$	1
		$E\text{-}DPDCH_2$	j

NOTE: In case the UE transmits more than 2 E-DPDCHs, $E\text{-}DPDCH_3$ and $E\text{-}DPDCH_4$ are always transmitted simultaneously.

HS-DPCCH (Release 6)

The β_{hs} values are derived from the quantized amplitude ratios A_{hs}, which are translated from Δ_{ACK} , Δ_{NACK} and Δ_{CQI} signaled by higher layers. The translation of Δ_{ACK}, Δ_{NACK} and Δ_{CQI} into quantized amplitude ratios $A_{hs} = \beta_{hs}/\beta_c$ is shown in Table 9. HS-DPCCH are mapped to the I branch when $N_{max\text{-}dpdch}$ is 2, 4 or 6, and to the Q branch otherwise ($N_{max\text{-}dpdch}$ = 0, 1, 3 or 5).

Table 9: The quantization of the power offset

Signaled values for Δ_{ACK}, Δ_{NACK} and Δ_{CQI}	Quantized amplitude ratios $A_{hs} = \beta_{hs}/\beta_c$
8	30/15
7	24/15
6	19/15
5	15/15
4	12/15
3	9/15
2	8/15
1	6/15
0	5/15

HS-DPCCH is spread with code c_{hs} as specified in Table 10.

Table 10: Channelization code of HS-DPCCH

$N_{max\text{-}dpdch}$	Channelization code c_{hs}
0	$C_{ch, 256, 33}$
1	$C_{ch, 256, 64}$
2, 4, 6	$C_{ch, 256, 1}$
3, 5	$C_{ch, 256, 32}$

Uplink Scheduling

Absolute and relative grants are used in HSUPA scheduling to restrict the maximum transmit power ratios of UEs in the cell. This effectively limits the transport block size and uplink data rate of the UE. Absolute grants are used to initialize the scheduling process and provide absolute transmit power ratios to the UE. Relative grants are used for incremental increases or decreases of the allowed transmit power. In addition, UEs may have to evaluate scheduling commands from different radio links due to uplink macro diversity in HSUPA that requires UEs to receive packets from multiple cells. The serving radio link assigned to a UE is controlled by the serving cell that provides the absolute grant to the UE and also has full control of the scheduling process. The serving radio link set (RLS) consists of at least the serving cell and possibly additional radio links from the same Node B. The UE can receive and combine one relative grant from the serving RLS to increase, hold or decrease power. The UE can also have zero, one or several non-serving radio links from other Node Bs and receive one relative grant from each to either hold or decrease power. UE data received at the serving and non-serving Node Bs are soft-combined before the error free data is forward to the RNC (Radio Network Controller) where selective combining may be necessary to sort out duplicates received by different Node Bs.

UE data rate is configured according to E-DPDCH/DPCCH ratios. The power levels of E-DPCCH and HS-DPCCH are assigned relative to DPCCH. This maintains the basic mechanism of UE power control in WCDMA by the Node B. Uplink scheduling also requires the UE to maintain a Serving Grant (SG), which is updated at every TTI boundary representing the maximum E-DPDCH to DPCCH power ratio the UE may use in the next transmission. The SG is initialized by an absolute grant. It is used to select the appropriate E-TFC according to the available uplink power and data rate. Absolute and relative grants received by the UE to configure its SG are applied to the implicitly associated TTI. E-AGCH is a shared channel that uses E-RNTI (Radio Network Temporary Identifier) specific Cyclic Redundancy Check (CRC) to address messages to specific users or groups of users.

An absolute grant may apply to a specific HARQ process in the case of 2 ms TTI or to all HARQ processes for 10 ms TTI. This is indicated by the scope bit transmitted with the grant value on E-AGCH. It is also possible to de-activate specific HARQ processes for 2 ms TTI. Relative grants are applied incrementally to adjust the SG of a UE. This offers a means for non-serving radio links to avoid overload situations by transmitting a

"DOWN" on E-RGCH. Transmission of an "UP" is only possible for the serving RLS. All radio links that are part of the Serving RLS transmit the same relative grant value.

When a relative grant is received for a specific TTI the UE updates its SG according to the scheduling grant table. It first determines an index in the SG-table close to the EDPDCH/DPCCH power ratio used for the previous TTI on this HARQ process (also called SG LUPR; LUPR = Last Used Power Ratio). E-RGCH commands for one HARQ cycle is 40 ms for 10 ms TTI and 16 ms for 2 ms TTI. After reception of "DOWN" from a non-serving radio link the SG is saturated for one HARQ cycle where the maximum E-DPDCH to DPCCH power ratio for the UE is not incremented above the latest SG. In additional, the network may configure each UE with a primary E-RNTI and a secondary E-RNTI. The network can assign a limited secondary grant to simultaneously control a group of "always on" UEs that only send large amounts of uplink data occasionally. A primary E-RNTI may be assigned to an individual UE only if it needs to send more uplink data. When a primary grant is no longer needed, it can be switched to the secondary grant with a scope of "All HARQ Processes" and an "INACTIVE" grant value for the primary E-RNTI.

E–DCH Absolute Grant Channel (E-AGCH)

E-AGCH is a downlink physical channel used to transmit absolute grants to a UE or a group of UEs. It is transmitted from the serving cell only, with a fixed SF = 256, at a fixed rate of 30 kbps using QPSK modulation. The absolute grant consists of a 5 bit grant value plus 1 extra bit indicating the scope of the grant. The scope determines whether the absolute grant is valid for a specific HARQ process or for all HARQ processes. The absolute grant is channel coded with 1/3 code rate convolution coding. The resulting 60 bits are transmitted in a 2 ms sub-frame for 2 ms TTI or repeated in all 5 sub-frames for 10 ms TTI. E-AGCH is a shared channel that uses an E-RNTI specific CRC in order to address different UEs. Each UE may be configured with a primary E-RNTI and a secondary E-RNTI. The Absolute Grant Value indicates the maximum E-DPDCH/DPCCH ratio the UE is allowed in the next transmission. Absolute Grant Scope indicates the applicability of the grant as "Per HARQ process" or "All HARQ processes" and whether HARQ process activation/de-activation will affect one or all processes. "All HARQ processes" is only valid (applicable) for 10ms TTI and the current version of Secondary E-RNTI.

E-DCH Relative Grant Channel (E-RGCH)

Relative grants are used to incrementally adjust the allowed UE transmit power. E-RGCH uses spreading factor 128 and QPSK modulation. E-RGCH and E-HICH of a UE share the same channelization code, which is differentiated by a signature hopping pattern assigned by higher layers. A UE can receive and combine one relative grant from all E-RGCHs transmitted within the serving RLS, which can be UP (+1), DOWN (-1) or HOLD (0). The UE can also receive one relative grant from each of the non-serving radio links, which can be DOWN (-1) or HOLD (0). This allows only the serving RLS to increase the uplink power. Non-serving radio links can only indicate overload situations

by decreasing power. The relative grant of a serving RLS is transmitted in one 2 ms sub-frame for 2 ms TTI or 12 slots for 10 ms TTI. The relative grant of a non-serving radio link is transmitted in 15 slots. This enables the processing time requirements at the UE to be optimized.

E-RGCH has a fixed SF = 128 and is transmitted in 3, 12 or 15 consecutive slots with a sequence of 40 ternary values in each slot. The 3 and 12 slot durations are used by serving RLS for 2 or 10 ms TTI. The 15 slot duration is used by non-serving RLS. A Serving Relative Grant is transmitted from all cells in the serving RLS that allows the Node B scheduler to incrementally adjust the SG of a UE under its control. By definition, there can be only one serving relative grant command received at any one time with a value of "UP", "DOWN" or "HOLD". Non-serving Relative Grant is transmitted from a non-serving radio link allowing neighboring Node Bs to adjust the power of a UE that is not under its control to avoid overload situations. By definition, there could be multiple non-serving relative grant commands received at any time by a UE with either "DOWN" or "HOLD" values.

E-DCH Hybrid ARQ Indicator Channel (E-HICH)

E-HICH uses SF = 128 and QPSK modulation. The same channelization code is shared by E-HICH and E-RGCH on a UE and is differentiated by a signature hopping pattern assigned by higher layers. E-HICH carries the HARQ acknowledgement indicator, ACK or NACK from each cell inside the active set of the UE. Since the same data is sent from the UE to all cells at the same time, retransmission is not required when ACK is received from any cell. The acknowledgement indicator from the serving RLS has values ACK (+1) or NACK (-1); however, non-serving radio link uses ACK (+1) or NACK (0). Both serving RLS and non-serving radio links transmit the acknowledgement indicator in 3 slots for 2 ms TTI or 12 slots for 10 ms TTI, with a sequence of 40 binary values in each slot. ACK or NACK is sent at a fixed period after the corresponding E-DPDCHs to avoid timing ambiguity.

Fractional Dedicated Physical Channel (F-DPCH)

F-DPCH is a downlink channel used in 3GPP Release 6 as an alternative to optimize downlink channelization code usage. It is not added specifically for HSUPA but its use is necessary to achieve the highest UL data rate. When DPCH is not used, F-DPCH is used to carry only TPC bits to control UE power on UL DPCCH. Several UEs can share one downlink channelization code for SF = 256 using a new slot format that contains only the Transmit Power Control (TPC) bits without pilot or data fields present. A UE specific timing offset is assigned to multiplex up to 10 UEs onto one F-DPCH channelization code to carry control information from layer 1 (TPC commands). This represents a special case of downlink DPCCH where each 10 ms frame is split into 15 slots consist of 2560 chips each corresponding to one power-control period.

HARQ Entity

HARQ is a retransmission protocol for improving link adaptation errors. There is one HARQ entity at the UE. A number of parallel HARQ processes are used to support the HARQ entity in a UE that allow transmissions to take place continuously while waiting for feedback on the successful or unsuccessful reception of previous transmissions. At a given TTI, the HARQ entity identifies the HARQ process for which a transmission should take place. Based on the timing, it routes the received ACK/NACK information to the appropriate HARQ process. The number of HARQ processes is equal to the HARQ round-trip-time, which is 4 for 10 ms TTI and 8 for 2 ms TTI. The set of cells transmitting identical ACK/NACK information is the same as the set of cells sending identical TPC bits (excluding the cells which are not in the E-DCH active set). The Serving E-DCH cell and the HS-DSCH Serving cell are identical. The same contents are transmitted on E-RGCHs of cells belonging to the serving RLS, which are combined by the UE. E-RGCHs from non-serving RLS are cell specific and cannot be combined. There is an upper limit for the number of retransmissions.

HARQ Processes

HARQ processes are used to transmit packets continuously from the UE without requiring it to wait for ACK/NACK responses from the network. Four HARQ processes are configured for 10 ms TTI, which corresponds to 40 ms round trip time. Eight HARQ processes are configured for 2 ms TTI, which corresponds to 16 ms round trip time. Each HARQ process is associated with a HARQ buffer. Each HARQ process also maintains a current count of the number of transmissions that have taken place in the buffer. At the time of a new transmission, the HARQ entity provides the HARQ profile to use for all transmissions and re-transmissions, which also includes information on the maximum number of transmissions to perform and the power offset with which to configure the physical layer. For each transmitted data packet, the UE is sending a Retransmission Sequence Number (RSN) on E-DPCCH in a clearly specified way that indicates the Redundancy Version (RV) of each HARQ transmission for the Node B to decode retransmissions according to Chase Combining (CC) or Incremental Redundancy (IR). The RSN is a 2 bit value; therefore, after the 3rd retransmission, it is not incremented any more and all packets have RSN = 3.

Happy Bit

The happy bit is a single bit field that is passed from MAC to physical layer for inclusion on E-DPCCH to indicate whether or not the UE is satisfied (‘happy’) with its current SG. This bit is always present and can take on two values, " Happy" and " Not Happy", to indicate whether the UE could use more resources or not. The UE indicates it is ‘unhappy’ when it is transmitting as much scheduled data as allowed by the current SG but enough power is available to transmit at higher data rate and it requires more than a defined time to empty the buffer under its currently allowed conditions. The happy bit is always ‘unhappy’ for a deactivated process. Besides the “Happy Bit”, the UE may include scheduling feedback information in the MAC-e PDU on priority of available logical channel, buffer status and power headroom. In addition, the network also has the

option to configure non-scheduled processes that are not subject to scheduling for specific guaranteed bit rate services or signaling radio bearers.

UE Maximum Output Power with HS-DPCCH and E-DCH

The Maximum Power Reduction (MPR) from the nominal maximum output power according to Cubic Metric (CM) requirements for β_c, β_d, β_{hs}, β_{ec} and β_{ed} during a fully or partially transmitted DPCCH timeslot is specified in Table 11.

Table 11: UE Maximum Output Power with HS-DPCCH and E-DCH

UE Transmit Channel Configuration	CM (dB)	MPR (dB)
For all combinations of DPDCH, DPCCH, HS-DPCCH, E-DPDCH and E-DPCCH	$0 \le CM \le 3.5$	MAX (CM-1, 0)
Note 1: CM = 1 for β_c/β_d =12/15, β_{hs}/β_c =24/15. For all other combinations of DPDCH, DPCCH, HS-DPCCH, E-DPDCH and E-DPCCH the MPR is based on the relative CM difference.		

Cubic Metric (CM) is based on the UE transmit channel configuration and is given by

$$CM = CEIL\ \{ [20 * \log10 ((v_norm^3)_{rms}) - 20 * \log10 ((v_norm_ref^3)_{rms})] / k, 0.5 \}$$

CEIL {x, 0.5} means round up to closest 0.5dB, i.e. CM ∈ [0, 0.5, 1.0, 1.5, 2.0, 2.5, 3.0, 3.5]

k = 1.85 for signals where all channelization codes meet the criteria $C_{SF,N}$ where N< SF/2

k = 1.56 for signals where any channelization code meet the criteria $C_{SF,N}$ where N ≥ SF/2

v_norm is the normalized voltage waveform of the input signal

v_norm_ref is the normalized voltage waveform of the reference signal (12.2 kbps AMR Speech) and

$$20 * \log10 ((v_norm_ref^3)_{rms}) = 1.52\ dB$$

Release 6 HSDPA with E-DCH inactive: The UL Reference Measurement Channel and the Fixed Reference Channels (FRC H-Set 1, QPSK) are specified in Annex C.10.1 and C.8.1.1 of TS 34.121-740. A HSDPA call is set up according to TS 34.108 clause 7.3.6 and RF parameters are set up according to Tables E.5.1 and E.5.10. The UE is entered into loopback test mode with HSDPA active during the loopback test. Details on loopback test mode for HSDPA is described in TS 34.108 and TS 34.109. The UL 12.2 kbps RMC physical, transport and TFCS parameters for HSDPA (Release 6) are indicated in Table 12.

Table 12: UL Setup for HSDPA and E-DCH

UL RMC Physical Parameters (12.2 kbps) for HSDPA Tests		
Parameter	**Level**	**Unit**
DPCCH/DPDCH power ratio	–5.46 (Note 1)	dB
Note 1: The power ratio for transmitter characteristics testing with HS-DPCCH depends on the beta values given in Table C.10.1.4 (TS 34.121-740) Note 2: With the exception of the DPCCH/DPDCH power ratio parameter in this table all other parameters are defined in UL reference measurement channel in clause C.2.1, Table C.2.1.1 (TS 34.121-740)		

UL RMC, Transport Channel Parameters (12.2 kbps) for HSDPA			
Higher Layer	**RAB/Signaling RB**	**RAB**	**SRB**
Note: As defined in UL reference measurement channel in clause C.2.1, Table C.2.1.2 (TS 34.121-740)			

UL RMC, TFCS (12.2 kbps) for HSDPA
Note: As defined in UL reference measurement channel in clause C.2.1, Table C.2.1.3 (TS 34.121-740)

Release 6 HSDPA with E-DCH active: The UL Reference Measurement Channel and the Fixed Reference Channels (FRC H-Set 1, QPSK) are specified in Annex C.11.1 and C.8.1.1 of TS 34.121-740. An E-DCH call is set up according to TS 34.108 clause 7.3.9 and the RADIO BEARER SETUP message exceptions shown in Tables 5.2B.2 to 5.2B.4 of TS-34.121-740. These exceptions allow the beta values to be set according to Table C.11.1.3 and the Power Control Algorithm for the Uplink to be set to algorithm 2. RF parameters are set up according to Table E.5A.1 of TS 34.108. The UE is entered into loopback test mode 1, both 12.2kbps RMC and HSDPA are loop backed to E-DCH during the loopback test. Details on loopback test mode for HSDPA and E-DCH S are described in TS 34.108 and TS 34.109. The following describes the inner loop power control necessary to maintain the required E-TFCI during the test.

1. Configure communication test set to start transmitting HSDPA and the UE to loop back the data received on E-DCH.
2. Set the Absolute Grant accoding to Table C.11.1.3 of TS 34.121-740
3. Set the UE power to be at least 5dB lower than the Maximum output power.
4. Send power control bits to give one TPC_cmd = +1 command to the UE, wait 500 ms and repeat this process until the E-TFCI transmitted by the UE begins to decrease.
5. Send power control bits to give one TPC_cmd = -1 command to the UE and confirm E-TFCI transmitted by the UE is equal to target E-TFCI in Table C.11.1.3.
6. Measure the mean power of the UE. The mean power should be averaged over at least one timeslot.
7. Repeat the measurement for the different combinations of beta values given in Table C.11.1.3.

The maximum output power with HS-DPCCH and E-DCH active, derived in step 6 above, must not exceed the range prescribed by the maximum output power and tolerance in Table 5.2B.5 (TS 34.121-740). The above prodedures will result in a power slightly below the maximum, and therefore the lower limits in Table 5.2B.5 need to be made lower by an amount [to be determined by 3GPP].

The UL reference measurement channel for Transmitter test is set according to Table 12 with the power ratio between HS-DPCH, DPCCH, DPDCH, E-DPCCH and E-DPDCH set to the values defined in Table 15.

E-DCH UE Categories

The UE categories defined for HSUPA require different levels of implementation complexity. The categories differ in the maximum number of E-DCH codes, the minimum spreading factor, supported TTI and maximum transport block size. The maximum data rates shown in Table 13 are dependent on the maximum transport block size and TTI supported by each UE category (See Figure 1 for possible channel configurations in each E-DCH UE Category).

Table 13: Physical Channel Parameters on E-DPDCH for E-DCH Tests

UE E-DCH Category	Maximum E-DCH Codes Transmitted	Number of HARQ Processes	E-DCH TTI (ms)	Minimum Spreading Factor	Maximum E-DCH Transport Block Bits	Max Rate (Mbps)
1	1	4	10	4	7110	0.7296
2	2	8	2	4	2798	1.4592
	2	4	10	4	14484	
3	2	4	10	4	14484	1.4592
4	2	8	2	2	5772	2.9185
	2	4	10	2	20000	2.00
5	2	4	10	2	20000	2.00
6 (No DPDCH)	4	8	2	2 SF2 & 2 SF4	11484	5.76
	4	4	10		20000	2.00
7 (No DPDCH)	4	8	2	2 SF2 & 2 SF4	22996	?
	4	4	10		20000	?

NOTE: When 4 codes are transmitted in parallel, two codes shall be transmitted with SF2 and two with SF4.
UE Categories 1 to 6 support QPSK only. UE Category 7 supports QPSK and 16QAM. (TS 25.306-7.3.0)

DL Reference Measurement Channel for E-DCH Tests

On the downlink, a 12.2 kbps RMC is used for DCH and FRC H-Set 1 (QPSK) is used for HS-DSCH. See Appendices for WCDMA and HSDPA on RMC and FRC.

UL Reference Measurement Channel for E-DCH Tests

The MAC-d flow parameters in Table 14 and physical channel parameters in Table 13 are used to establish the uplink E-DCH. A 12.2 kbps RMC is used; however, with the exception that the DPCCH/DPDCH power ratio is established according to the β values required for transmitter characteristics tests in Table 15.

Table 14: MAC-d Flow Parameters for UL:
[Max Bit Rate Depending on UE Category and TTI] / PS RAB for E-DCH Tests

Higher layer	RAB/Signaling RB	RAB
RLC	Logical channel type	DTCH
	RLC mode	UM
	Payload sizes, bit	328
	Max data rate, bps	Depends on UE category and TTI
	AMD PDU header, bit	8
MAC	MAC-es multiplexing	N/A
	MAC-d PDU size, bit	336
	MAC-e/es header fixed part, bit	18
Layer 1	TrCH type	E-DCH
	TTI	10ms (alt. 2ms) (NOTE)

Higher layer	RAB/Signaling RB	RAB
	Coding type	TC
	CRC, bit	24
NOTE: The support of 2ms TTI depends on the UE category		

E-DCH Channel Configurations

Different E-DCH channel configurations are used for each UE category, consisting of a combination of HSUPA channels, HS-DPCCH, DPCCH and DPDCH. The number of E-DPDCHs used also depends on the UE category, ranging from one channel using SF4 in UE category 1 to two SF2 channels and two SF4 channels in UE category 6.

E-DCH Beta Values

DPCCH/DPDCH power ratio (β_c/β_d) for the 12.2 kbps RMC used in uplink DPCH, β_{hs} used in H-Set 1 for HS-DPCCH and the β values for E-DCH are indicated in Table 15. E-TFCI values for the Sub-Tests are listed in Table 16 and 17.

Table 15: Physical Channel Gain Factor (β Values) for Transmitter Characteristics Tests with HS-DPCCH and E-DCH

Sub-Test	β_c	β_d	β_d (SF)	β_c/β_d	β_{hs} (Note 1)	β_{ec}	β_{ed} (Note 5) (Note 6)	β_{ed} (SF)	β_{ed} (Codes)	CM (dB) (Note 2)	MPR (dB) (Note 2)	AG Index (Note 6)	E-TFCI
1	11/15 (Note 3)	15/15 (Note 3)	64	11/15 (Note 3)	22/15	209/225	1309/225	4	1	1.0	0.0	20	75
2	6/15	15/15	64	6/15	12/15	12/15	94/75	4	1	3.0	2.0	12	65
3	15/15	9/15	64	15/9	30/15	30/15	$\beta_{ed}1$: 47/15 $\beta_{ed}2$: 47/15	4 4	2	2.0	1.0	15	94
4	2/15	15/15	64	2/15	4/15	2/15	56/75	4	1	3.0	2.0	17	70
5	15/15 (Note 4)	15/15 (Note 4)	64	15/15 (Note 4)	30/15	24/15	134/15	4	1	1.0	0.0	21	80

Note 1: Δ_{ACK}, Δ_{NACK} and Δ_{CQI} = 8 ⇔ $A_{hs} = \beta_{hs}/\beta_c = 30/15$ ⇔ $\beta_{hs} = 30/15 * \beta_c$.
Note 2: CM = 1 for β_c/β_d =12/15, β_{hs}/β_c=24/15. For all other combinations of DPDCH, DPCCH, HS-DPCCH, E-DPDCH and E-DPCCH the MPR is based on the relative CM difference.
Note 3: For subtest 1 the β_c/β_d ratio of 11/15 for the TFC during the measurement period (TF1, TF0) is achieved by setting the signaled gain factors for the reference TFC (TF1, TF1) to β_c = 10/15 and β_d = 15/15.
Note 4: For subtest 5 the β_c/β_d ratio of 15/15 for the TFC during the measurement period (TF1, TF0) is achieved by setting the signaled gain factors for the reference TFC (TF1, TF1) to β_c = 14/15 and β_d = 15/15.
Note 5: In case of testing by UE using E-DPDCH Physical Layer category 1, Sub-Test 3 is omitted according to TS 25.306 Table 5.1g.
Note 6: β_{ed} can not be set directly; it is set by Absolute Grant Value.

Table 16: E-TFCI values for E-DCH with HSDPA for Sub-Tests 1,2,4,5

Information Element	Value/Remark
E-DCH info	Uplink DPCH info
- E-DPDCH info	
- Reference E-TFCIs	5 E-TFCIs
- Reference E-TFCI	11
- Reference E-TFCI PO	4
- Reference E-TFCI	67
- Reference E-TFCI PO	18
- Reference E-TFCI	71
- Reference E-TFCI PO	23
- Reference E-TFCI	75
- Reference E-TFCI PO	26
- Reference E-TFCI	81
- Reference E-TFCI PO	27

Table 17: E-TFCI values for E-DCH with HSDPA for Sub-Tests 3

Information Element	Value/Remark
E-DCH info	Uplink DPCH info
- E-DPDCH info	
- Reference E-TFCIs	2 E-TFCIs
- Reference E-TFCI	11
- Reference E-TFCI PO	4
- Reference E-TFCI	92
- Reference E-TFCI PO	18

E-DCH Transport Block Size Tables

The mappings between the chosen E-TFCI and the corresponding E-DCH transport block size are given in Tables 18 – 21.

Table 18: Mapping of 2ms TTI E-DCH Transport Block Size Table 0

E-TFCI	TB Size (bits)	E-TFCI	TB Size (bits)	E-TFCI	TB Size (bits)	E-TFCI	TB Size (bits)	E-TFCI	TB Size (bits)
0	18	30	342	60	1015	90	3008	120	8913
1	120	31	355	61	1053	91	3119	121	9241
2	124	32	368	62	1091	92	3234	122	9582
3	129	33	382	63	1132	93	3353	123	9935
4	133	34	396	64	1173	94	3477	124	10302
5	138	35	410	65	1217	95	3605	125	10681
6	143	36	426	66	1262	96	3738	126	11075
7	149	37	441	67	1308	97	3876	127	11484
8	154	38	458	68	1356	98	4019		
9	160	39	474	69	1406	99	4167		

E-TFCI	TB Size (bits)	E-TFCI	TB Size (bits)	E-TFCI	TB Size (bits)	E-TFCI	TB Size (bits)	E-TFCI	TB Size (bits)
10	166	40	492	70	1458	100	4321		
11	172	41	510	71	1512	101	4480		
12	178	42	529	72	1568	102	4645		
13	185	43	548	73	1626	103	4816		
14	192	44	569	74	1685	104	4994		
15	199	45	590	75	1748	105	5178		
16	206	46	611	76	1812	106	5369		
17	214	47	634	77	1879	107	5567		
18	222	48	657	78	1948	108	5772		
19	230	49	682	79	2020	109	5985		
20	238	50	707	80	2094	110	6206		
21	247	51	733	81	2172	111	6435		
22	256	52	760	82	2252	112	6672		
23	266	53	788	83	2335	113	6918		
24	275	54	817	84	2421	114	7173		
25	286	55	847	85	2510	115	7437		
26	296	56	878	86	2603	116	7711		
27	307	57	911	87	2699	117	7996		
28	318	58	944	88	2798	118	8290		
29	330	59	979	89	2901	119	8596		

Table 19: Mapping of 2ms TTI E-DCH Transport Block Size Table 1

E-TFCI	TB Size (bits)	E-TFCI	TB Size (bits)	E-TFCI	TB Size (bits)
0	18	43	2724	86	7252
1	186	44	2742	87	7288
2	204	45	3042	88	7428
3	354	46	3060	89	7464
4	372	47	3078	90	7764
5	522	48	3298	91	7800
6	540	49	3316	92	7908
7	674	50	3334	93	7944
8	690	51	3378	94	8100
9	708	52	3396	95	8136
10	726	53	3414	96	8436
11	858	54	3732	97	8472
12	876	55	3750	98	8564
13	1026	56	3972	99	8600
14	1044	57	3990	100	8772
15	1062	58	4068	101	8808
16	1194	59	4086	102	9108

E-TFCI	TB Size (bits)	E-TFCI	TB Size (bits)	E-TFCI	TB Size (bits)
17	1212	60	4404	103	9144
18	1330	61	4422	104	9220
19	1348	62	4628	105	9256
20	1362	63	4646	106	9444
21	1380	64	4740	107	9480
22	1398	65	4758	108	9780
23	1530	66	5076	109	9816
24	1548	67	5094	110	9876
25	1698	68	5284	111	9912
26	1716	69	5302	112	10116
27	1734	70	5412	113	10152
28	1866	71	5430	114	10452
29	1884	72	5748	115	10488
30	1986	73	5766	116	10532
31	2004	74	5940	117	10568
32	2022	75	5958	118	10788
33	2034	76	6084	119	10824
34	2052	77	6102	120	11124
35	2070	78	6420	121	11178
36	2370	79	6438	122	11188
37	2388	80	6596	123	11242
38	2406	81	6614	124	11460
39	2642	82	6756	125	11478
40	2660	83	6774		
41	2678	84	7092		
42	2706	85	7110		

Table 20: Mapping of 10ms TTI E-DCH Transport Block Size Table 0

E-TFCI	TB Size (bits)	E-TFCI	TB Size (bits)	E-TFCI	TB Size (bits)	E-TFCI	TB Size (bits)	E-TFCI	TB Size (bits)
0	18	30	389	60	1316	90	4452	120	15051
1	120	31	405	61	1371	91	4636	121	15675
2	124	32	422	62	1428	92	4828	122	16325
3	130	33	440	63	1487	93	5029	123	17001
4	135	34	458	64	1549	94	5237	124	17706
5	141	35	477	65	1613	95	5454	125	18440
6	147	36	497	66	1680	96	5680	126	19204
7	153	37	517	67	1749	97	5915	127	20000
8	159	38	539	68	1822	98	6161		
9	166	39	561	69	1897	99	6416		
10	172	40	584	70	1976	100	6682		
11	180	41	608	71	2058	101	6959		
12	187	42	634	72	2143	102	7247		
13	195	43	660	73	2232	103	7547		

E-TFCI	TB Size (bits)	E-TFCI	TB Size (bits)	E-TFCI	TB Size (bits)	E-TFCI	TB Size (bits)	E-TFCI	TB Size (bits)
14	203	44	687	74	2325	104	7860		
15	211	45	716	75	2421	105	8186		
16	220	46	745	76	2521	106	8525		
17	229	47	776	77	2626	107	8878		
18	239	48	809	78	2735	108	9246		
19	249	49	842	79	2848	109	9629		
20	259	50	877	80	2966	110	10028		
21	270	51	913	81	3089	111	10444		
22	281	52	951	82	3217	112	10877		
23	293	53	991	83	3350	113	11328		
24	305	54	1032	84	3489	114	11797		
25	317	55	1074	85	3634	115	12286		
26	331	56	1119	86	3784	116	12795		
27	344	57	1165	87	3941	117	13325		
28	359	58	1214	88	4105	118	13877		
29	374	59	1264	89	4275	119	14453		

Table 21: Mapping of 10ms TTI E-DCH Transport Block Size Table 1

E-TFCI	TB Size (bits)	E-TFCI	TB Size (bits)	E-TFCI	TB Size (bits)
0	18	41	5076	82	11850
1	186	42	5094	83	12132
2	204	43	5412	84	12186
3	354	44	5430	85	12468
4	372	45	5748	86	12522
5	522	46	5766	87	12804
6	540	47	6084	88	12858
7	690	48	6102	89	13140
8	708	49	6420	90	13194
9	858	50	6438	91	13476
10	876	51	6756	92	13530
11	1026	52	6774	93	13812
12	1044	53	7092	94	13866
13	1194	54	7110	95	14148
14	1212	55	7428	96	14202
15	1362	56	7464	97	14484
16	1380	57	7764	98	14556
17	1530	58	7800	99	14820
18	1548	59	8100	100	14892
19	1698	60	8136	101	15156
20	1716	61	8436	102	15228
21	1866	62	8472	103	15492
22	1884	63	8772	104	15564
23	2034	64	8808	105	15828

E-TFCI	TB Size (bits)	E-TFCI	TB Size (bits)	E-TFCI	TB Size (bits)
24	2052	65	9108	106	15900
25	2370	66	9144	107	16164
26	2388	67	9444	108	16236
27	2706	68	9480	109	16500
28	2724	69	9780	110	16572
29	3042	70	9816	111	17172
30	3060	71	10116	112	17244
31	3378	72	10152	113	17844
32	3396	73	10452	114	17916
33	3732	74	10488	115	18516
34	3750	75	10788	116	18606
35	4068	76	10824	117	19188
36	4086	77	11124	118	19278
37	4404	78	11178	119	19860
38	4422	79	11460	120	19950
39	4740	80	11514		
40	4758	81	11796		

Radio Bearer and Serving Cell settings

Table 22: RADIO BEARER SETUP message: AM or UM

Information Element	Value/Remark
CHOICE channel requirement	Uplink DPCH info
- Power Control Algorithm	Algorithm2
- Δ_{ACK}	Value used in test: see Table C.11.1.3
- Δ_{NACK}	Value used in test: see Table C.11.1.3
- Ack-Nack repetition factor	3 (required for continuous HS-DPCCH signal)
E-DCH info	
- E-DPCCH/DPCCH power offset	Value used in test: see Table C.11.1.3
Downlink HS-PDSCH Information	
- Measurement Feedback Info	
- CQI Feedback cycle, k	4 ms
- CQI repetition factor	2 (required for continuous HS-DPCCH signal)
- Δ_{CQI}	Value used in test: see Table C.11.1.3

Table 23: Serving cell Settings during Maximum Output Power Measurement

Parameter	Unit	Cell 1
Cell type		Serving cell
UTRA RF Channel Number		As defined in clause 5.2B.4.1
Qqualmin	dB	-24
Qrxlevmin	dBm	-115
UE_TXPWR_MAX_RACH	dBm	+21
$\hat{I}_{or}$ (see notes 1 and 2)	dBm/3.84 MHz	-86
NOTE 1: The power level is specified in terms of $\hat{I}_{or}$ instead of CPICH_RSCP because RSCP is a receiver measurement, whereas the SS can only set $\hat{I}_{or}$.		
NOTE 2: The cell fulfils TS 25.304, 5.2.3.1.2.		

Downlink Physical Channel Configurations

Connection Setup Levels

Parameter During Connection Setup	(dB)
P-CPICH_Ec/I_{or}	-10
P-CCPCH and SCH_Ec/I_{or}	-12
PICH _Ec/I_{or}	-15
HS-PDSCH	off
HS-SCCH_1	off
DPCH_Ec/I_{or}	-5
E-HICH	off
E-AGCH	off
E-RGCH	off
OCNS_Ec/I_{or}	-3.1

DL Physical Channel Parameters for E-DCH Transmitter Characteristics Tests

Parameter During Measurement	(dB)	Remark
P-CPICH_Ec/I_{or}	-10	
P-CCPCH and SCH_Ec/I_{or}	-12	
PICH _Ec/I_{or}	-15	
HS-PDSCH	-3	During TTIs, in which the HS-PDSCH is not allocated to the UE via HS-SCCH signaling, the HS-PDSCH shall be transmitted continuously with constant power
HS-SCCH_1	-8	During TTIs, in which the HS-SCCH is not allocated to the UE the HS-SCCH shall be transmitted continuously with constant power.
DPCH_Ec/I_{or}	-10	
E-AGCH	-20	
E-HICH	-20	
E-RGCH	DTX'd	
OCNS_Ec/I_{or}	Necessary power so that total transmit power spectral density of Node B (I_{or}) adds to one	OCNS interference consists of 6 dedicated data channels as specified in Table E.5A.4

APPENDIX F: HPSK Summary Info

- **3-G devices**
  - transmit multiple I/Q multiplexed channels
  - each channel is spread by a different orthogonal code
  - different channels can operate at different power levels
  - equal distribution of power between I/Q axes is desired
    - especially at the receiver
    - for symmetry between I/Q paths
- **Complex Scrambling**
  - IS-95 signals are encoded in 6 bits / 64 bit Walsh code and spread with PN sequences for identifying different users prior to splitting into I/Q paths and modulated
  - complex scrambling is the mathematical equivalent of complex multiplication of two signals
    - $(I_{chip}+jQ_{chip})*(I_{scramble}+jQ_{scramble}) = (I_{chip}*I_{scramble}-Q_{chip}*Q_{scramble})+j(I_{chip}*Q_{scramble}+Q_{chip}*I_{scramble}) = I+jQ$
    - the resultant I and Q channels individually are not complex signals
    - equal amplitudes of I_{chip} and Q_{chip} results in QPSK, otherwise, 4-QAM
    - $I_{scramble}$ and $Q_{scramble}$ is QPSK; (+1, -1)
    - the constellation for the data (I_{chip} and Q_{chip}) is rotated by the scrambling code ($I_{scramble}$ and $Q_{scramble}$) by ±45º or ±135º
    - the angular distribution of points in the final constellation is determined by the relative amplitudes of I_{chip} and Q_{chip}
- **HPSK**
  - IS-95 uses OQPSK to reduce peak to average power and minimize transitions through I/Q origin
  - when random PN sequences ($I_{scramble}+jQ_{scramble}$) are used in complex scrambling, peak to average ratio is higher than 2-G (IS-95)
    - complex scrambling using random PN sequences is called Pseudo-Noise Complex Quadature Phase Shift Keying (PNCQPSK)
  - 3-G systems use HPSK, also called Orthogonal Complex Quadrature Phase Shift Keying (OCQPSK) to reduce peak to average ratio
  - HPSK is variation of basic complex scrambling
    - it uses even number Walsh codes to spread the different channels to ensure pairs of consecutive chips are identical
    - with pairs of consecutive identical chips, zero-crossing is eliminated for every second chips using a fixed repeating scrambling signal sequence called the Walsh rotator
      - $I_{scramble}=W_0=\{1,1\}$ and $Q_{scramble}=W_1=\{1,-1\}$
      - for consecutive identical chip points, the 1st chip is rotated +45º and the 2nd is rotated -45º to ensure the chips are 90º apart in the final constellation; therefore, transition does not go through zero
      - 0º phase transitions due to consecutive identical chips are also eliminated to avoid overshoots as a result of the ±45º rotations, which further reduces the peak to average ratio
    - transition across chip pairs may still go through zero, but peak to average ratio is improved
  - **Primary PN sequence**

- a primary PN spreading code is applied to the I/Q signals after the complex multiplication of (I_{chip}+jQ_{chip}) and ($I_{scramble}$+j$Q_{scramble}$) to identify the mobile transmitter
  - the primary PN sequence can be applied either before or after complex scrambling (multiplication by Walsh rotator) with the same final result
  - the same primary PN sequence is applied to both I and Q
    - the 90º separation between consecutive constellation points for identical chips is maintained
      - PN={+1} results in no change; PN={-1} inverts the constellation point by 180º

- **Secondary PN sequence**
  - a decimated secondary PN spreading code is multiplied with the Q component of the Walsh rotator W_1={1,-1} to minimize Multi-Access Interference (MAI) and improving reception at the receiver
    - a decimation factor of 2 would hold the secondary PN sequence value for 2 chip periods, which effectively makes it half the chip rate
    - it randomizes the direction of phase rotation while keeping the phase difference of 90º between pairs of consecutive final points
    - PN={+1} results in +45º for 1st point and -45º for 2nd point
    - PN={-1} results in -45º for 1st point and +45º for 2nd point
    - zero-crossing and 0º phase transition remain avoided
- **Final HPSK Spreading / Scrambling Function**
  - $I_s + jQ_s = PN_p + jPN_p * PN_s * W_1$
    - W_0={1,-1} has no function; therefore, removed
  - the peak to average power ratio of the signal is improved by approximately 1-1.5 dB for signals with 2 channels of the same amplitude

- **CCDF**
  - power measured in CCDF is instantaneous envelope power defined by $P=(I^2 + Q^2)/Z_0$
    - I & Q are quadrature voltage components and Z_0 is characteristic impedance
  - CCDF curve defines the time a waveform spends at or above a given power level, which defines the probability for that particular power level
  - PAR (peak to average ratio) is defined as the ratio of the peak envelope power to the average envelope power of a signal
  - PAR for basic WCDMA configuration (1 DPDCH + 1 DPCCH) ≥ 3.6 dB < 0.1% of the time, worst case would be expected with 5 or 6 channels
  - PAR of signal with 1 DPCCH + 5 DPDCH is 2.85 dB higher than 1 DPDCH + 1 DPCCH