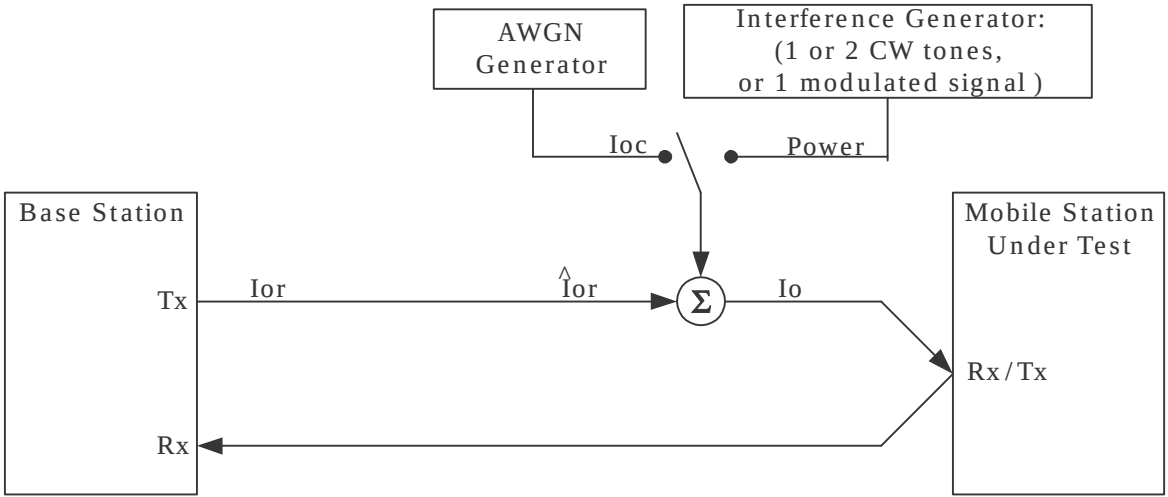

Figure 6.5.1-4. Functional Set-up for Tests Without Fading

Table 4.4.5.2-1. Test Parameters for Maximum RF Output Power for Spreading Rate 1

Parameter	Units	Value
$\hat{I}_{or}$	dBm/1.23 MHz	-104
$\frac{\text{Pilot } E_c}{I_{or}}$	dB	-7
$\frac{\text{Traffic } E_c}{I_{or}}$	dB	-7.4

Table 4.4.5.2-2. Test Parameters for Maximum RF Output Power for Spreading Rate 1

Parameter	Units	Value
$\hat{I}_{or}$	dBm/1.23 MHz	-86
$\frac{\text{Pilot } E_c}{I_{or}}$	dB	-7
$\frac{\text{Traffic } E_c}{I_{or}}$	dB	-7.4

Table 4.4.5.2-4. Test Parameters for Maximum RF Output Power for Spreading Rate 3

Parameter	Units	Value
$\hat{I}_{or}$	dBm/3.69 MHz	-81
$\frac{\text{Pilot } E_c}{I_{or}}$	dB	-10
$\frac{\text{Traffic } E_c}{I_{or}}$	dB	-12.4

Table 4.4.5.2-3. Test Parameters for Maximum RF Output Power for Spreading Rate 3

Parameter	Units	Value
$\hat{I}_{or}$	dBm/3.69 MHz	-99
$\frac{\text{Pilot } E_c}{I_{or}}$	dB	-10
$\frac{\text{Traffic } E_c}{I_{or}}$	dB	-12.4

Table 4.4.5.3-2. Maximum Output Power Backoff Allowances

Test Mode Configuration	Output Power Reduction
R-PICH + R-DCCH	2.5 dB
R-PICH + R-DCCH + R-FCH (1500 bps)	2 dB
R-PICH + R-FCH (9600 bps) + R-SCH0 (9600 bps)	2 dB
R-PICH + R-DCCH + R-SCH0 (9600 bps)	1.5 dB