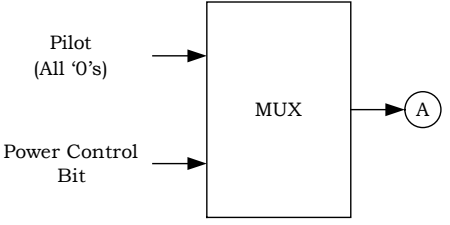

Figure 2.1.3.1.1.1-1. Reverse Pilot Channel Structure

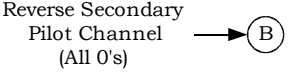

Figure 2.1.3.1.1.1-2. Reverse Secondary Pilot Channel Structure

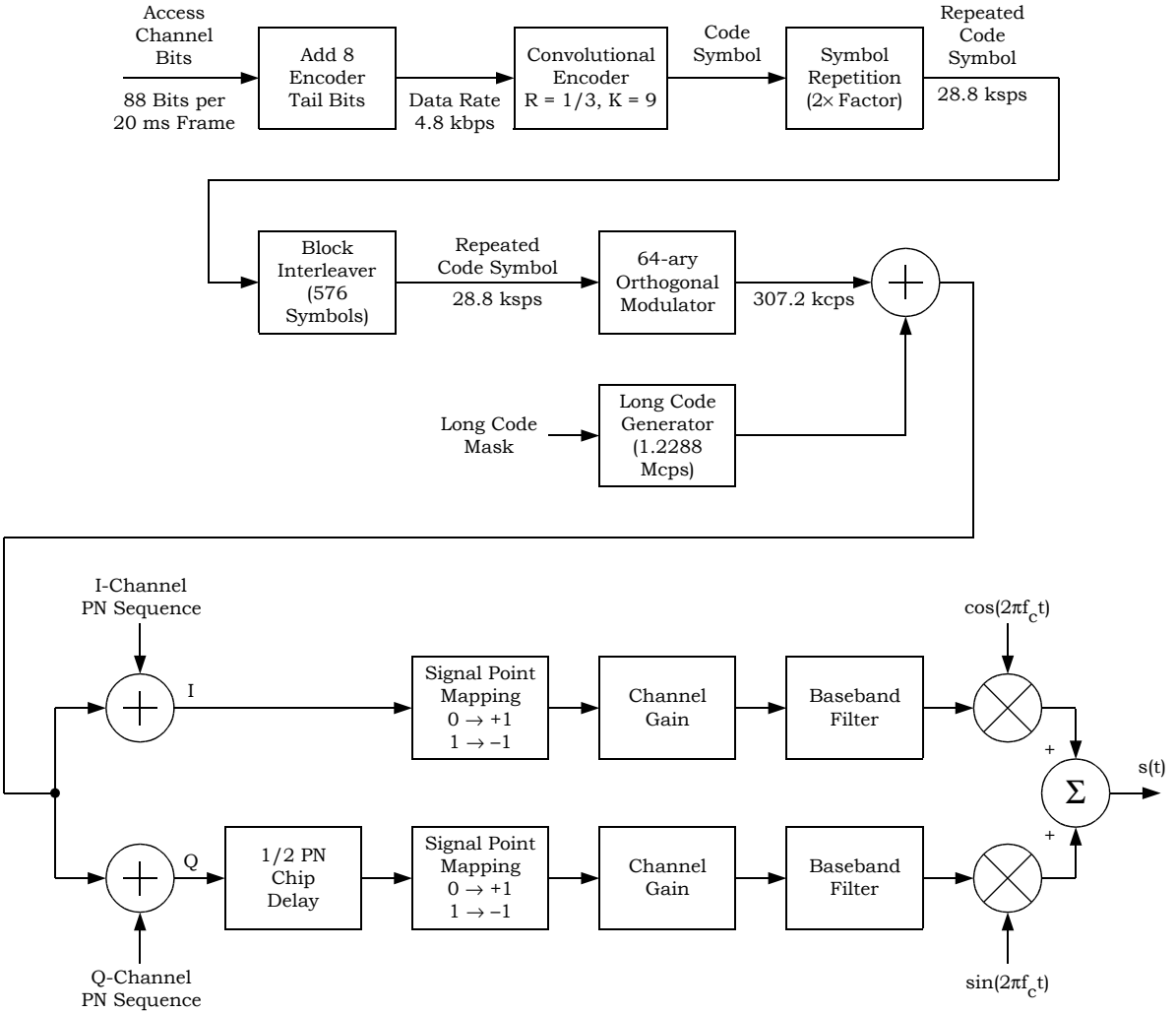

Figure 2.1.3.1.1.1-3. Access Channel Structure for Spreading Rate 1

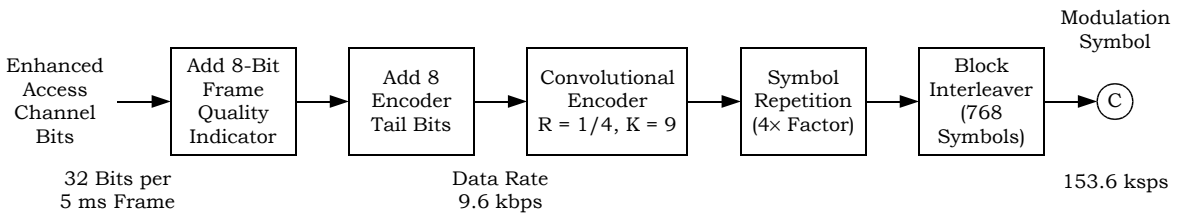

Figure 2.1.3.1.1.1-4. Enhanced Access Channel Header Structure for Spreading Rate 1

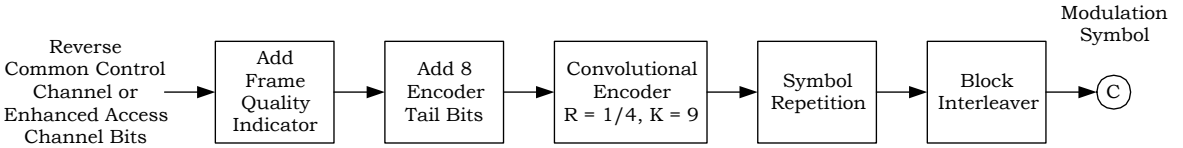

Bits/Frame	Bits	Data Rate (kbps)	Factor	Symbols	Rate (ksps)
172 Bits/5 ms	12	38.4	1×	768	153.6
360 Bits/10 ms	16	38.4	1×	1,536	153.6
172 Bits/10 ms	12	19.2	2×	1,536	153.6
744 Bits/20 ms	16	38.4	1×	3,072	153.6
360 Bits/20 ms	16	19.2	2×	3,072	153.6
172 Bits/20 ms	12	9.6	4×	3,072	153.6

Figure 2.1.3.1.1.1-5. Enhanced Access Channel Data and the Reverse Common Control Channel Structure for Spreading Rate 1

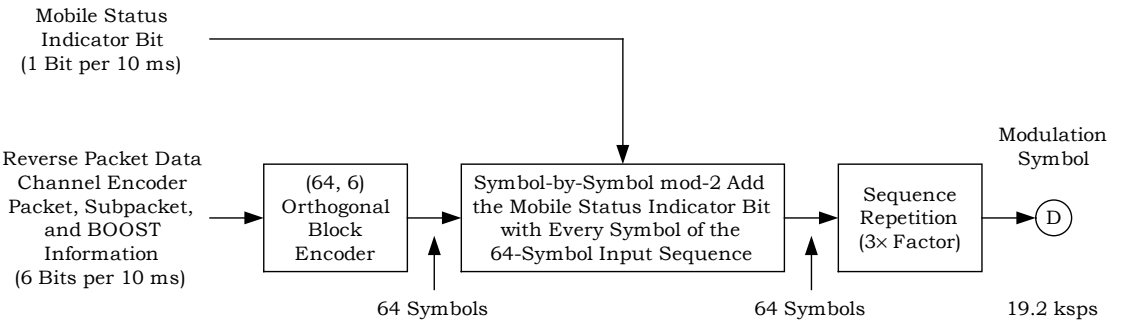

Figure 2.1.3.1.1.1-6. Reverse Packet Data Control Channel Structure

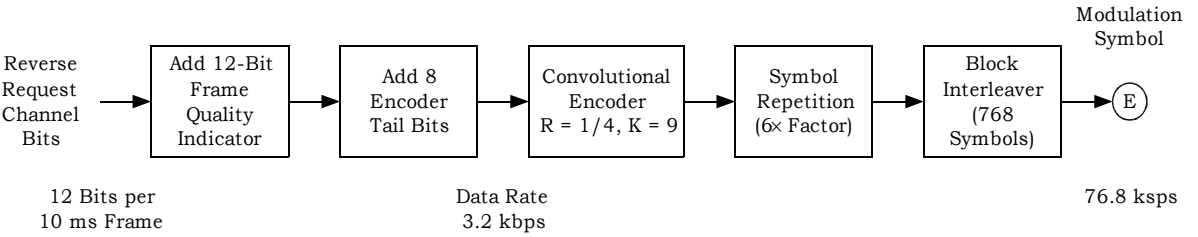

Figure 2.1.3.1.1.1-7. Reverse Request Channel Structure

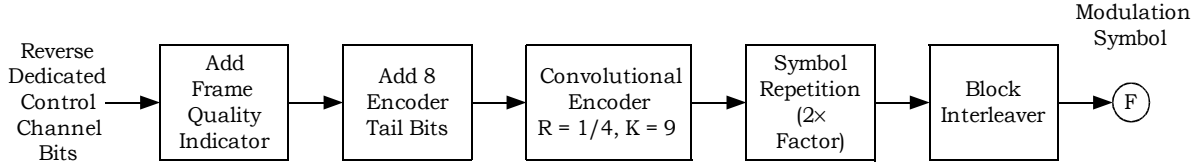

Bits/Frame	Bits	Data Rate (kbps)	Symbols	Rate (ksps)
24 Bits/5 ms	16	9.6	384	76.8
172 Bits/20 ms	12	9.6	1,536	76.8
1 to 171 Bits/20 ms	12 or 16	1.05 to 9.55	1,536	76.8

Note: If flexible data rates are supported, there can be 1 to 171 channel bits in a 20 ms frame and the encoded symbols will be repeated and then punctured to provide a 76.8 ksps modulation symbol rate.

Figure 2.1.3.1.1.1-8. Reverse Dedicated Control Channel Structure for Radio Configuration 3

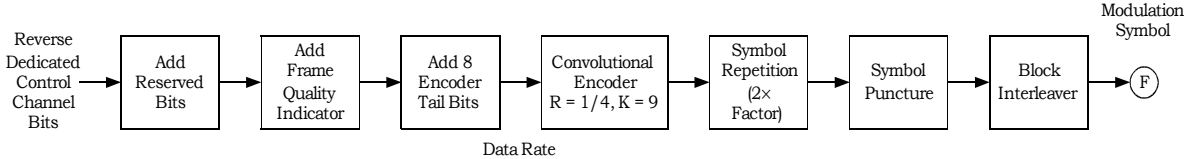

Bits/Frame	Bits	Bits	Data Rate (kbps)	Deletion	Symbols	Rate (ksps)
24 Bits/5 ms	0	16	9.6	None	384	76.8
267 Bits/20 ms	1	12	14.4	8 of 24	1,536	76.8
1 to 268 Bits/20 ms	0	12 or 16	1.05 to 14.4		1,536	76.8

Notes: If flexible data rates are supported, there can be 1 to 268 channel bits in a 20 ms frame and the encoded symbols will be repeated and then punctured to provide a 76.8 ksps modulation symbol rate.

Figure 2.1.3.1.1.1-9. Reverse Dedicated Control Channel Structure for Radio Configuration 4

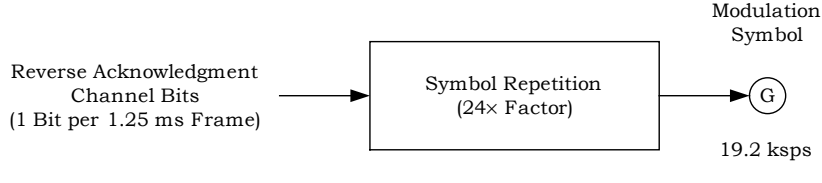

Figure 2.1.3.1.1.1-10. Reverse Acknowledgment Channel Structure

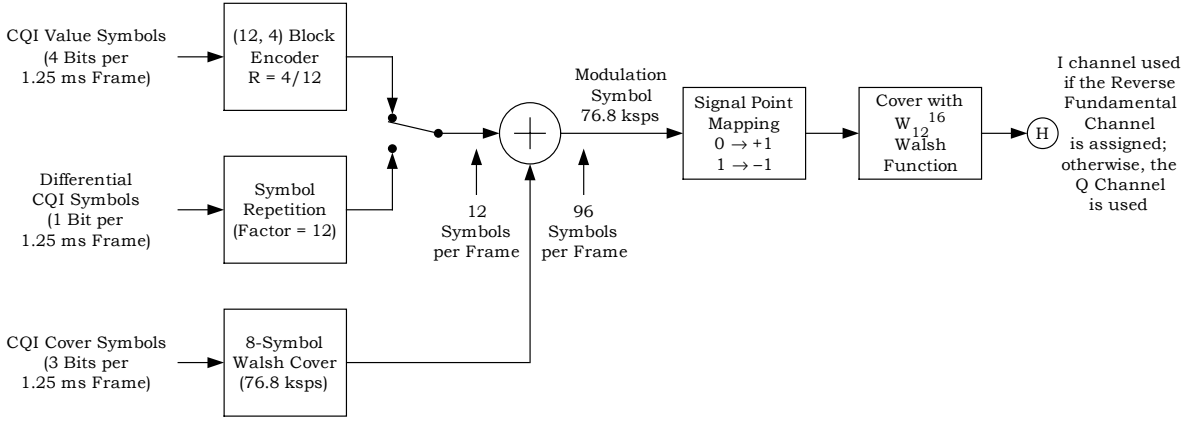

Figure 2.1.3.1.1.1-11. Reverse Channel Quality Indicator Channel Structure

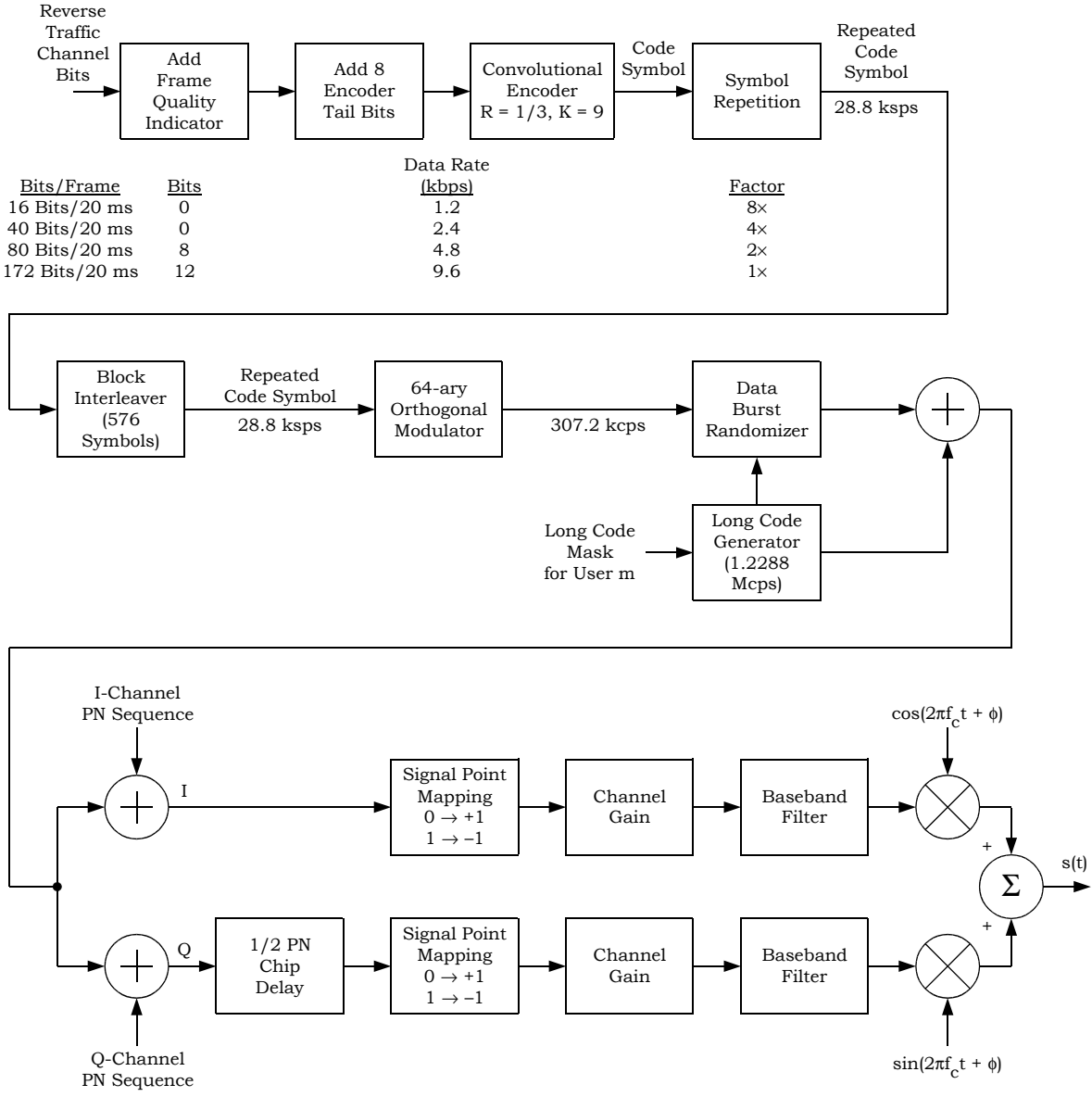

Figure 2.1.3.1.1.1-12. Reverse Fundamental Channel and Reverse Supplemental Code Channel Structure for Radio Configuration 1

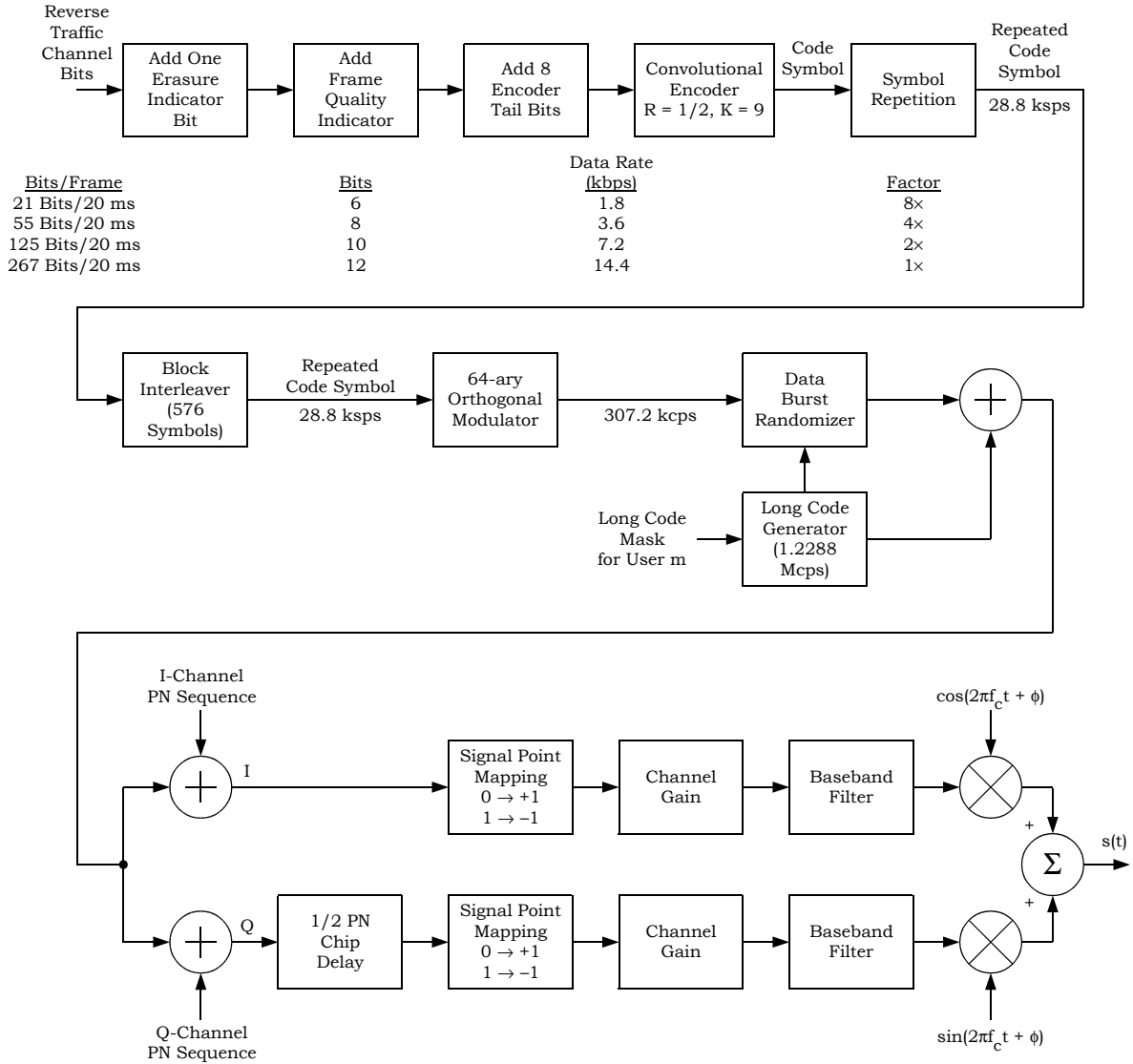

Figure 2.1.3.1.1.1-13. Reverse Fundamental Channel and Reverse Supplemental Code Channel Structure for Radio Configuration 2

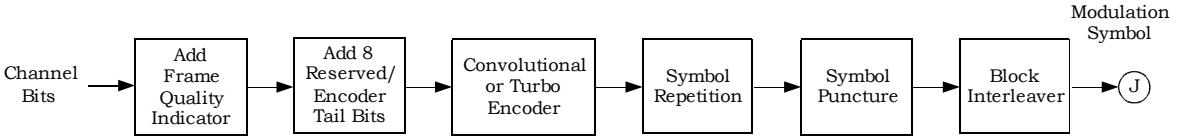

Bits/Frame	Bits	Data Rate (kbps)	R	Factor	Deletion	Symbols	Rate (ksps)
24 Bits/5 ms	16	9.6	1/4	2×	None	384	76.8
16 Bits/20 ms	6	1.5	1/4	16×	1 of 5	1,536	76.8
40 Bits/20n ms	6	2.7/n	1/4	8×	1 of 9	1,536	76.8/n
80 Bits/20n ms	8	4.8/n	1/4	4×	None	1,536	76.8/n
172 Bits/20n ms	12	9.6/n	1/4	2×	None	1,536	76.8/n
360 Bits/20n ms	16	19.2/n	1/4	1×	None	1,536	76.8/n
744 Bits/20n ms	16	38.4/n	1/4	1×	None	3,072	153.6/n
1,512 Bits/20n ms	16	76.8/n	1/4	1×	None	6,144	307.2/n
3,048 Bits/20n ms	16	153.6/n	1/4	1×	None	12,288	614.4/n
6,120 Bits/20n ms	16	307.2/n	1/2	1×	None	12,288	614.4/n
1 to 6,119 Bits/20n ms							

Notes:

1. n is the length of the frame in multiples of 20 ms. For 31 to 54 encoder input bits per frame, n = 1 or 2. For more than 54 encode input bits per frame, n = 1, 2, or 4.
2. The 5 ms frame is only used for the Reverse Fundamental Channel.
3. The Reverse Fundamental Channel only uses 15 to 192 encoder input bits per frame with n = 1.
4. Turbo coding may be used for the Reverse Supplemental Channels with 384 or more encoder input bits per frame; otherwise, K = convolutional coding is used.
5. With convolutional coding, the Reserved/Encoder Tail bits provide an encoder tail. With turbo coding, the first two of these bits are reserved bits that are encoded and the last six bits are replaced by an internally generated tail.
6. If variable-rate Reverse Supplemental Channel operation, flexible reverse link data rates, or both are supported, the parameters are determined from the specified number of channel bits per frame, the maximum assigned number of channel bits per frame f the Reverse Fundamental Channel or the Reverse Supplemental Channel, and the specified frame quality indicator length.
   - The frame quality indicator length is 16 for more than 192 encoder input bits per frame; 12 or 16 for 97 to 192 encoder input bits per frame; 8, 12, or 16 for 55 to 96 encoder input bits per frame; and 6, 8, 12, or 16 otherwise.
   - The code rate is 1/2 for more than 3,072 encoder input bits per frame; otherwise, it is 1/4. If the number of encoder input bi per frame is less than 384, the type of encoding is convolutional; otherwise, it is the same as that of the maximum assigned data rate for the channel.
   - If the specified number of channel bits per frame is equal to the maximum assigned number of channel bits per frame and t number and the specified frame quality indicator length match one of the listed cases, the symbol repetition factor and symb puncturing from that listed case are used. Otherwise, the symbol repetition factor and puncturing are calculated to achieve the same interleaver block size as for the maximum assigned data rate for the channel.
   - If the maximum assigned data rate matches one of the data rates listed in the figure, the interleaver block size for that listed data rate is used. Otherwise, the interleaver block size of the next higher listed data rate is used.

Figure 2.1.3.1.1.1-14. Reverse Fundamental Channel and Reverse Supplemental Channel Structure for Radio Configuration 3

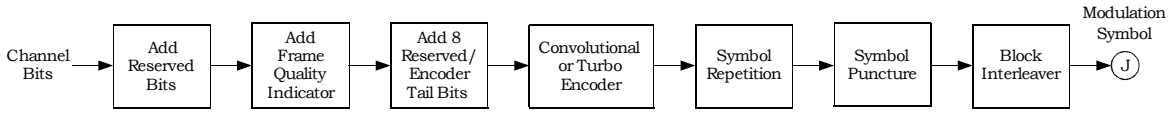

Bits/Frame	Bits	Bits	Data Rate (kbps)	R	Factor	Deletion	Symbols	Rate (ksps)
24 Bits/5 ms	0	16	9.6	1/4	2×	None	384	76.8
21 Bits/20 ms	1	6	1.8	1/4	16×	8 of 24	1,536	76.8
55 Bits/20n ms	1	8	3.6/n	1/4	8×	8 of 24	1,536	76.8/n
125 Bits/20n ms	1	10	7.2/n	1/4	4×	8 of 24	1,536	76.8/n
267 Bits/20n ms	1	12	14.4/n	1/4	2×	8 of 24	1,536	76.8/n
552 Bits/20n ms	0	16	28.8/n	1/4	1×	4 of 12	1,536	76.8/n
1,128 Bits/20n ms	0	16	57.6/n	1/4	1×	4 of 12	3,072	153.6/n
2,280 Bits/20n ms	0	16	115.2/n	1/4	1×	4 of 12	6,144	307.2/n
4,584 Bits/20n ms	0	16	230.4/n	1/4	1×	4 of 12	12,288	614.4/n
1 to 4,583 Bits/20n ms								

Notes:

1. n is the length of the frame in multiples of 20 ms. For 37 to 72 encoder input bits per frame, n = 1 or 2. For more than 72 encoder input bits per frame, n = 1, 2, or 4.
2. The 5 ms frame is only used for the Reverse Fundamental Channel.
3. The Reverse Fundamental Channel only uses 15 to 288 encoder input bits per frame with n = 1.
4. Turbo coding may be used for the Reverse Supplemental Channels with 576 or more encoder input bits per frame; otherwise, K = 9 convolutional coding is used.
5. With convolutional coding, the Reserved/Encoder Tail bits provide an encoder tail. With turbo coding, the first two of these bits are reserved bits that are encoded and the last six bits are replaced by an internally generated tail.
6. If variable-rate Reverse Supplemental Channel operation, flexible reverse link data rates, or both are supported, the parameters are determined from the specified number of channel bits per frame, the maximum assigned number of channel bits per frame for the Reverse Fundamental Channel or the Reverse Supplemental Channel, and the specified frame quality indicator length.
   - When the number of channel bits per frame is 21, 55, 125, or 267 and the corresponding number of frame quality indicator bits is 6, 8, 10, and 12, an initial reserved bit is used; otherwise, no initial reserved bits are used.
   - The frame quality indicator length is 16 for more than 288 encoder input bits per frame; 12 or 16 for 145 to 288 encoder input bits per frame; 10, 12, or 16 for 73 to 144 encoder input bits per frame; 8, 10, 12, or 16 for 37 to 72 encoder input bits per frame; and 6, 8, 10, 12, or 16 otherwise.
   - If the number of encoder input bits per frame is less than 576, the type of encoding is convolutional; otherwise, it is the same as that of the maximum assigned data rate for the channel.
   - If the specified number of channel bits per frame is equal to the maximum assigned number of channel bits per frame and that number and the specified frame quality indicator length match one of the listed cases, the symbol repetition factor and symbol puncturing from that listed case are used. Otherwise, the symbol repetition factor and puncturing are calculated to achieve the same interleaver block size as for the maximum assigned data rate for the channel.
   - If the maximum assigned data rate matches one of the data rates listed in the figure, the interleaver block size for that listed data rate is used. Otherwise, the interleaver block size of the next higher listed data rate is used.
   - If ERAM is disabled, the code rate is 1/4. If ERAM is enabled, the code rate of the turbo encoder shall be selected as follows:
     $R = 1/3$, if $8/3 < N/I \leq 3$; $R = 1/4$, if $3 < N/I \leq 4$ or $N/I = 8/3$; $R = 1/5$, if $N/I > 4$
     where I denotes the number of encoder input bits per frame, and N denotes the interleaver block size.

Figure 2.1.3.1.1.1-15. Reverse Fundamental Channel and Reverse Supplemental Channel Structure for Radio Configuration 4

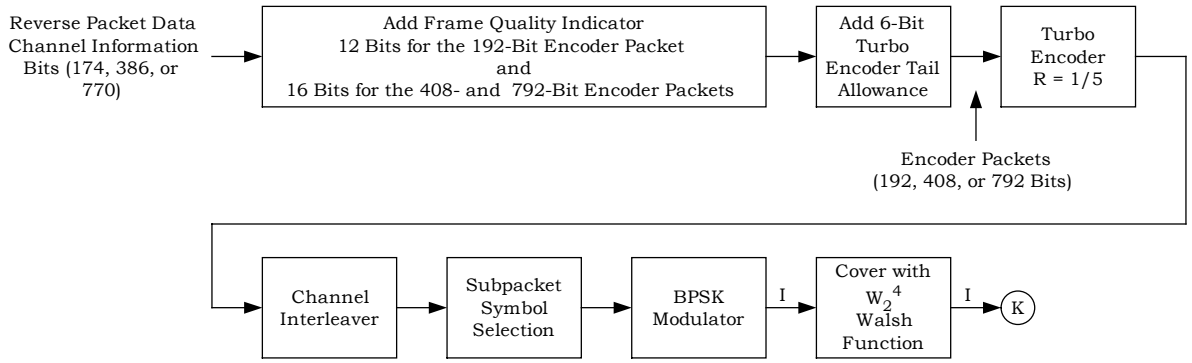

Figure 2.1.3.1.1.1-16. Reverse Packet Data Channel Structure for Radio Configuration 7 with Encoder Packet Sizes of 192, 408, and 792 Bits

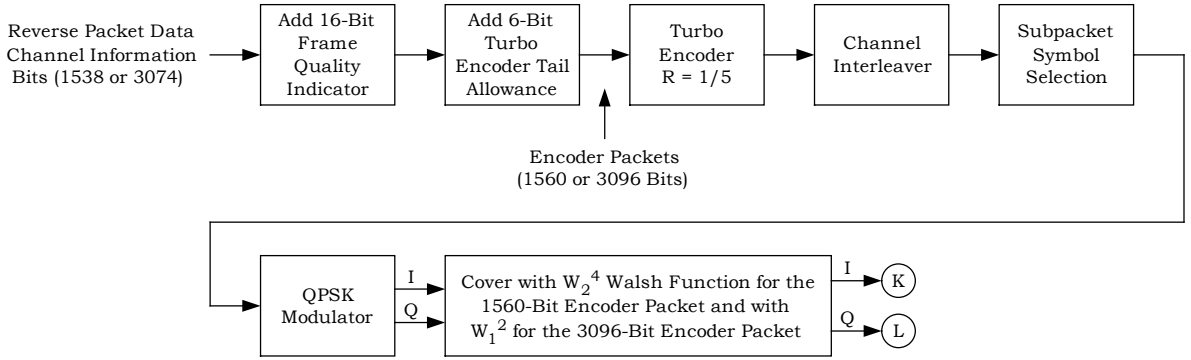

Figure 2.1.3.1.1.1-17 Reverse Packet Data Channel Structure for Radio Configuration 7 with Encoder Packet Sizes of 1560 and 3096 Bits

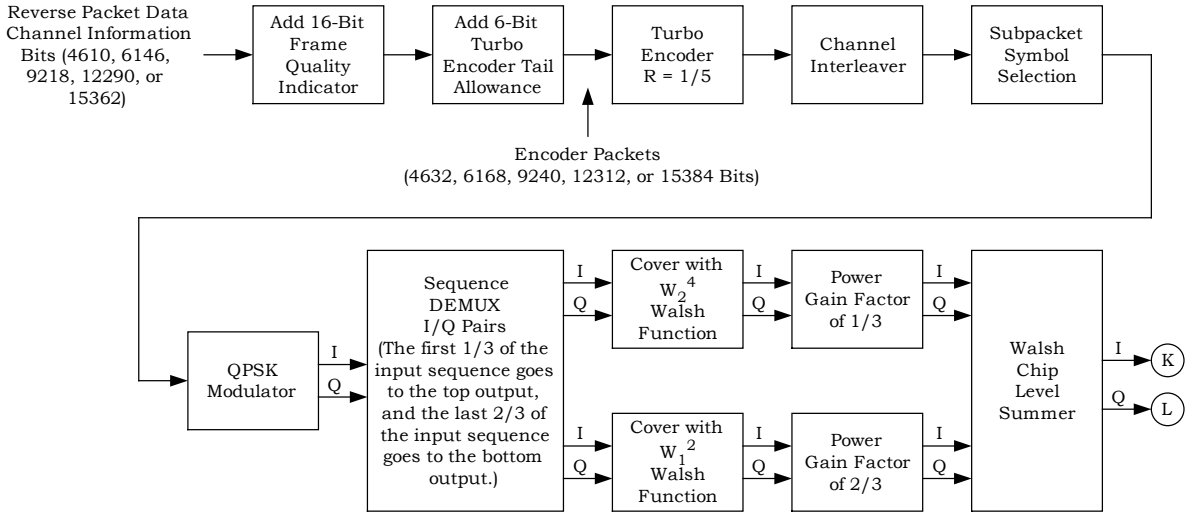

Figure 2.1.3.1.1.1-18. Reverse Packet Data Channel Structure for Radio Configuration 7 with Encoder Packet Sizes of 4632, 6168, 9240, 12312, and 15384 Bits

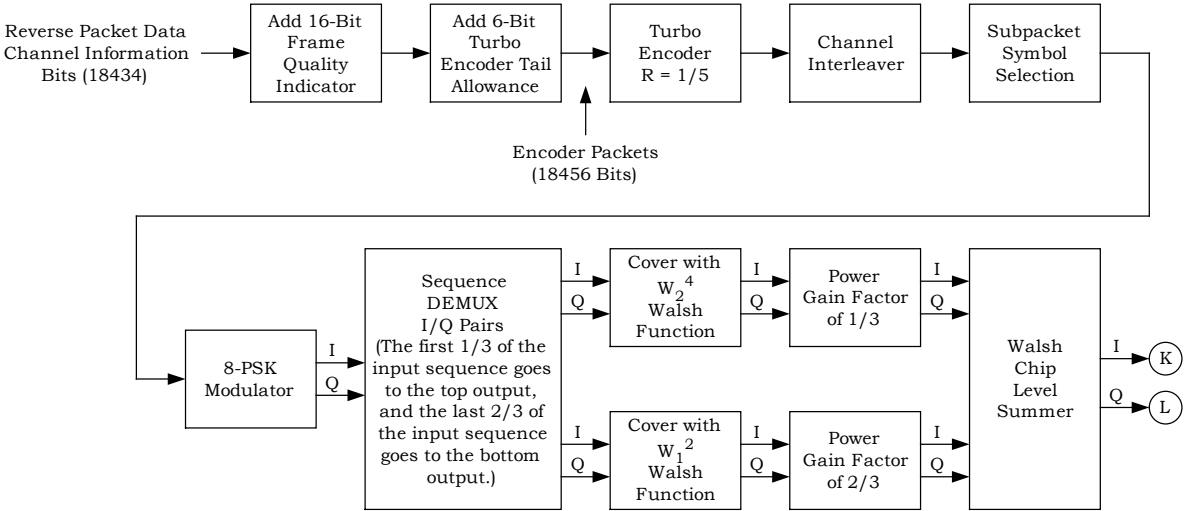

Figure 2.1.3.1.1.1-19. Reverse Packet Data Channel Structure for Radio Configuration 7 with Encoder Packet Size of 18456 Bits

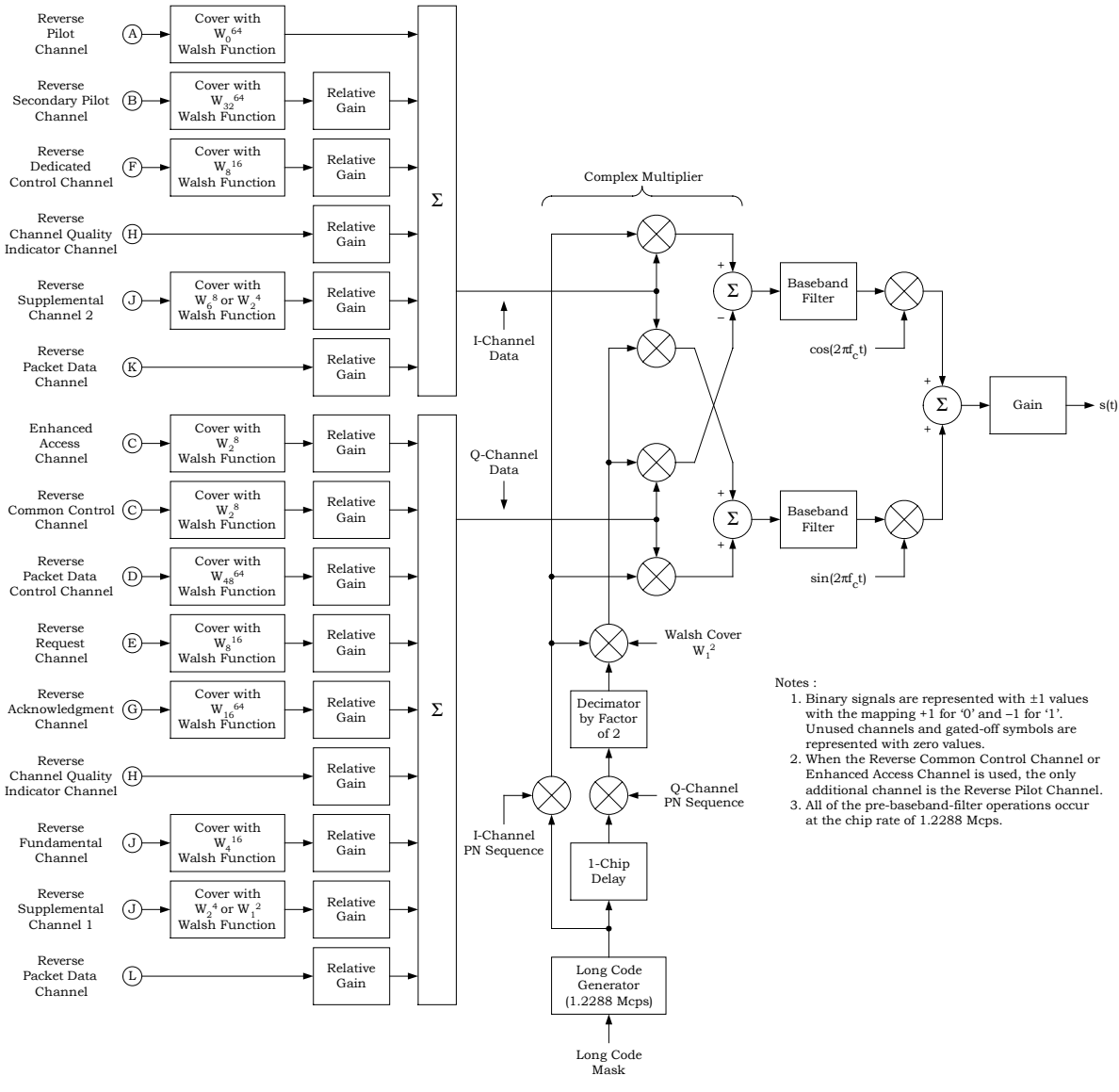

Figure 2.1.3.1.1.1-20. Spreading Rate 1 I and Q Mapping for the Reverse Pilot Channel, the Reverse Secondary Pilot Channel, the Enhanced Access Channel, the Reverse Common Control Channel, the Reverse Packet Data Control Channel, the Reverse Request Channel, the Reverse Acknowledgment Channel, the Reverse Channel Quality Indicator Channel, the Reverse Traffic Channel with Radio Configurations 3 and 4, and the Reverse Packet Data Channel with Radio Configuration 7